ROHDE&SCHWARZ

Service manual

SIGNAL GENERATOR SMPD

376.8011.52

Printed in West Germany

VOLUME II

Manual consists of 3 volumes

Contents of SMPD Manual

VOLUME I

1. Data Sheet

2. Preparation for Use and Operating Instructions

3. Maintenance

VOLUME II

4. Service Instructions for Complete Unit

5. Service Instructions for PC Boards Y1 to Y10

VOLUME III

5. Service Instructions for PC Boards Y11 to Y105, Option SMPD-B1 and Option SMPD-B2

Table of Contents

		Page
4	Service Instructions for the Complete Unit	4.1
4.1	Circuit Description	4.1
4.1.1	Synthesizer Principle	4.1
4.1.2	Level Processing and AM	4.2
4.1.3	Frequency Modulation	4.2
4.1.4	Modulation Generator	4.2
4.1.5	Control	4.2
4.2	Mechanical Construction	4.3
4.3	Checking and Adjusting	4.3
4.3.1	Divider Amplitude R231 (Y5)	4.4
4.3.2	Phase Control Working Point R34	4.4
4.3.3	Reference Modulator Zero Adjustment R5	4.5
4.3.4	RF Modulator Zero Adjustment R54	4.5
4.3.5	Rectifier Offset R13	4.5
4.3.6	Level (> 21.25 MHz) R8	4.5
4.3.7	Level (< 21.25 MHz) R56	4.5
4.3.8	Reference Frequency Calibration	4.5
4.3.9	FM Deviation Adjustment	4.5
4.4	Troubleshooting	4.6
4.4.1	Self-test	4.6
4.4.2	Troubleshooting Charts	4.6
4.4.2.1	Switch-on Condition	4.7
4.4.2.2	Level Fault	4.8
4.4.2.3	Frequency Fault, Fault Character	4.9
4.4.2.4	Harmonics Level too High	4.10
4.4.2.5	Noise Level too High	4.10
4.4.2.6	No or Distorted AM	4.11
4.4.2.7	No or Distorted FM	4.12
4.4.2.8	Test of Preselection in Y10 (Oscillator Control) if Output Frequency is Incorrect (Error Message 5)	4.13
4.4.2.9	Test of Increment Latches B9, B13, B17, B21 in Y4 (INT I) without Service EPROM if the Frequency Variation with Fine Resolution is Unsteady ..	4.13
4.4.2.10	Synchronization Fault in Y6 (INT III) for Incorrect Output Frequency (Error Message 3) ...	4.14
4.4.2.11	Synchronization Fault in Y7 (SMPC buffer) for Deviation or Carrier Frequency Variations with FM Selected (Error Message 1)	4.14
4.4.2.12	SMPD Performance Check	4.15
4.4.3	Signature Analysis	4.15
4.5	Required Measuring Instruments and Auxiliary Equipment	4.16
	Parts lists	
	Functional diagram	
	Circuit diagrams	
	Components location plans	

5 Service Instructions for PC Boards Y1 to Y10

Y	Designation	Ident No.	PC-Board	Lead	Parts Designation	Register
1	SMPD Processor	356.1405.04	356.1405.04			1
2	FM Stage	300.7014	300.5057	300.5070		2
3	AF Generator and Attenuator	300.3819	300.5092	300.5592		3
4	Interpolation Synth. I	300.2812	300.5111	300.5134		4
5	Interpolation Synth. II	300.7714	300.5234 300.6030	300.5257	Interpolation Synth. II Buffer Attenuator	5
6	Interpolation Synth. III	300.4415	300.5192	300.5211		6
7	SMPC Buffer	300.3219	300.6018 300.5157	300.5170	Buffer Control Buffer Oscillator	7
8	Output Oscillator I	300.3719	300.5270	300.5292		8
9	Output Oscillator II	300.4315	300.5311	300.5334		9
10	Oscillator Control	355.9619	355.9625	355.9648		10

Notes on Service Instructions for SMPD Subassemblies

For spare-part acquisition and stock-keeping, it is important to note that most of the subassemblies are taken unmodified from the Signal Generator SMPC. The designation SMPC in the following text should be read as SMPD.

The subassemblies Y1, Y15, Y19, Y25 and Y30 have been modified.

New additions are the subassemblies Y100 to Y105, the Pulse Modulator Option SMPD-B1 and Overload Protection Option SMPD-B2.

Supplement to Table of Contents, Volume III.

Y	Name	Order No.	PCB No.	Section
100	Controller	376.9418	376.9418	10
101	Diode switch I	914.9303	--	10
102	Diode switch II	914.9403	--	10
103	Broadband amplifier	376.9199	376.9218	10
104	Filter	914.9503	--	10
105	Frequency doubler	376.9501	376.9518	10
Pulse Modulator Option SMPD-B1		377.0914	377.0922	10
Overload Protection Option SMPD-B2		377.1110	--	10

4 Service Instructions for the Complete Unit

4.1 Circuit Description

(See SMPD block diagram, 376.8011 FS)

4.1.1 Synthesizer Principle

The frequency range of the SMPD is 0.005 to 2720 MHz. Output signals in the frequency range from 680 to 1360 MHz are directly generated by three oscillators in Y8. The frequencies from 21.25 to 680 MHz are derived by frequency division in Y9 and those from 0.005 to 21.25 MHz by frequency conversion in Y15. The mixing frequency is fixed at 135 MHz and produced in Y5. The frequency range 1360 to 2720 MHz is derived by frequency doubling of the signals of the output oscillator in Y105.

The output oscillators (Y8) are synchronized on Y11 to the 34th and 68th harmonic of a 20-MHz reference generated in Y5. The reference is sufficiently variable such that continuous coverage from the lowest harmonic used to the next higher one is ensured. It is this reference frequency which comprises the entire fine resolution of the synthesizer.

A digital synthesizer in Y4 generates a frequency between 200 to 300 kHz with a 28-bit resolution (approx. 1 mHz). This frequency is converted in two stages to between 12.2 to 12.3 MHz. In Y6 is an oscillator (195 to 202 MHz) which is synchronized by a PLL with a programmable divider producing frequency steps of 100 kHz. The gaps between these steps are compensated for by the 12.2 to 12.3 MHz from Y4, which are mixed in the PLL. A conversion with 45 MHz yields an output frequency from 240 to 247 MHz for Y6 with a resolution of approx. 1 mHz. The mixing frequency of 45 MHz is produced during unmodulated operation by division of the 135 MHz fixed frequency from Y5. During FM operation, it is added to the modulated output signal from Y2.

Y7 contains a tracking oscillator, which can be modulated. During unmodulated operation, or FM operation with little deviation, the oscillator (Y7) is synchronized to the output frequency of Y6 via a narrow-band control loop. By synchronous modulation of the output frequency of Y6 and the tracking oscillator, the full bandwidth of the modulation can be transferred despite the narrow band of the control loop. This enables the good noise characteristics of the tracking oscillator to be maintained. During large deviations, when the noise characteristics are no longer an advantage, the tracking oscillator is switched off and the signal from Y6 simply amplified.

In Y5 the output frequency from Y7 is reduced to the range 20 to 20.6 MHz by a very low-noise frequency divider and then fed to Y11 where harmonic synchronization occurs. Y10 contains a microprocessor which, via a D/A converter and control lines, selects an oscillator in Y8, and presets and monitors it during operation. All synthesizer steps are synchronized to the 10-MHz crystal oscillator Y40.

4.1.2 Level Processing and AM

The nominal envelope of the output signal is generated by a fixed frequency of 10 MHz with an analog multiplier as a reference modulator. This reference signal is rectified in Y15 where, before the 50-Ω series output resistor, the output signal is also rectified providing a reference for the true output level.

The nominal and true output levels are fed to a control amplifier in Y12 which controls the electronic RF adjuster. It is the EMF of the SMPD that is controlled and not the output voltage so that, even with high output levels, a low reflection coefficient is achieved.

Y13 and Y14 contain staggered, half-octave harmonic filters. The filtered signal is fed into a power amplifier (Y20) which provides the output signal up to +13 dBm in the frequency range from 21.25 to 1360 MHz.

Output stage III (Y15) provides for level processing of the range (0.005 to 21.25 MHz) by means of a power amplifier following the mixer as well as a third rectifier for controlling the input signal of the mixer for this range.

For the frequency range above 1360 MHz the signal level is increased by a further power amplifier following the frequency doubler Y105.

The mechanical attenuator Y30 is stepped in 2-dB units. The in-between values and the values below -127 dBm are electronically set.

4.1.3 Frequency Modulation

The subassembly Y2 feeds a modulated fixed frequency of 45 MHz to Y6. During FM AC operation, the centre frequency is synchronized with the 10-MHz reference frequency by a very narrow-band phase control loop. On switching to FM DC operation, a digital memory stores the control voltage which keeps the FM oscillator operating synchronously.

4.1.4 Modulation Generator

Y3 contains a digital synthesizer as a modulation generator. The synthesizer's output signal without modulation is also available on the rear panel.

4.1.5 Control

All setting data is input to the microprocessor Y1 from either the front panel Y19 or the IEC bus. The microprocessor calculates the data for the respective subassembly and transfers it via the SMPD's internal data bus.

4.2 Mechanical Construction

The SMPD consists of a chassis and the front and rear panels. The subassemblies Y1 to Y15 are plugged into the chassis. The base of the chassis is a motherboard via which all insensitive connections, such as power-supply and data lines, are made. Sensitive connections are made by flexible cable on the upper side of the subassemblies. In the front part of the chassis, the subassemblies Y20 (output amplifier) and Y30 (RF attenuator) are mounted. The front panel Y19, containing all operation controls and indicators, is screwed onto the front of the chassis. The rear panel Y25 supports the power supply and reference crystal oscillator subassemblies.

The subassemblies of the doubler section, Y105 (frequency doubler), Y104 (filter), Y103 (broadband amplifier), Y101 and Y102 (diode switch I and II) and Y100 (controller) are fitted on a board situated below the motherboard which also accommodates the option "pulse modulator".

Service Kit XPC-Z1 (337.9810.02) contains all the items necessary to make subassemblies Y1 to Y15 accessible for servicing and test EPROMS for signature analysis and tests on digital subassemblies.

4.3 Checking and Adjusting

The following adjustments deal with the complete unit:

Adjustment	Adjuster	Subassembly	Paragraph
Divider amplitude	R231	Y5	4.3.1
Operating point of phase control	R34	Y10	4.3.2
Reference modulator zero adjustment	R5	Y12	4.3.3
RF modulator zero adjustment	R54	Y12	4.3.4
Rectifier offset	R13	Y15	4.3.5
Level (> 21.25 MHz)	R8	Y12	4.3.6
Level (< 21.25 MHz)	R56	Y15	4.3.7
FM deviation adjustment	R31 R5	Y2 Y7	4.3.9 4.3.9

Necessary adjustments when changing subassemblies:

When changing subassemly ...	Adjust ... acc. to	Paragraph
Y2 FM stage	FM Deviation Adjustment	4.3.9
Y5 INT II	Divider Amplitude	4.3.1
Y7 SMPC buffer	FM Deviation Adjustment (only 2nd section, R5)	4.3.9
	Buffer Divider	Y5, 5.2.4
	Divider Amplitude	4.3.1
Y10 Oscillator control	Phase Control Working Point	4.3.2
Y11 Phase control	Divider Amplitude	4.3.1
	Phase Control Working Point	4.3.2
Y12 AM + ALC	RF Modulator Zero Adjustment	4.3.4
	Rectifier Offset	4.3.5
	Level (>21.25 MHz)	4.3.6
Y15 AT III	See Y12	4.3.4 to 4.3.6
	Level (<21.25 MHz)	4.3.7

4.3.1 Divider Amplitude R231 (Y5)

Connect RF analyzer to RF output socket 15. Set SMPD to 1360-MHz carrier frequency, 0-dBm output level, 0.1-kHz FM deviation and external FM. Short circuit FM input socket 31. Display output-signal spectrum on analyzer with 30 kHz resolution and 5 MHz span.

By switching modulation on and off, check on display that noise level of SMPD during FM operation is adequately measurable. If necessary, overdrive analyzer by 10 dB.

With FM switched on, minimize noise level 600 kHz from carrier frequency with R231 in Y5. After failure of synchronization or adjustment for minimum noise, adjust working point of phase control (see 4.3.2). Check noise level and if altered, retune R231. After each change of R231, carry out 4.3.2. Convert noise level measurement to 1 Hz bandwidth. Difference between carrier and noise levels must be > 124 dB.

4.3.2 Phase Control Working Point R34 (Y10)

Set SMPD to sweep between 680 and 699.9 MHz in 1300-kHz steps. Disconnect cable K15 on Y11. Attach oscilloscope to MP43. Adjust voltage at MP43 with R34 to a mid-value of 7 ±1 V. Reconnect cable K15.

4.3.3 Reference Modulator Zero Adjustment R5 (Y12)

Set SMPD to 22 MHz and 13 dBm. Measure level (10 MHz) at ST163 (with probe). Key in RCL 90 on SMPD front panel. Adjust R5 for minimum level at ST163. Note level difference.
Minimum value: 35 dB.

4.3.4 RF Modulator Zero Adjustment R54 (Y12)

Set SMPD to 22 MHz and 13 dBm. Measure level at output 15. Key in RCL 90 on SMPD front panel, with R54 set the same level difference as obtained in 4.3.3.

4.3.5 Rectifier Offset R13 (Y15)

Set SMPD to 21 MHz and 13 dBm. Measure level at output 15. Key in RCL 90 on SMPD front panel, with R13 set same level difference as obtained in 4.3.3.

4.3.6 Level (> 21.25 MHz) R8 (Y12)

Set SMPD to 500 MHz and 10 dBm. Connect calibrated power meter to output socket 15. Adjust R8 for 10.0 dB ±0.05.

4.3.7 Level (< 21.25 MHz) R56 (Y15)

Measure level at output socket 15 with SMPD set to 22 MHz, note level.
Reset SMPD to 21 MHz and adjust R56 for same value (±0.05 dB).

4.3.8 Reference Frequency Calibration

Connect calibrated frequency counter to output 14 (rear panel). Adjust for 10.000,000 MHz with trimmer 45 (rear panel). If, as a consequence of ageing, it is no longer possible to trim to nominal frequency, the crystal oscillator must be readjusted (see Y25 paragraph 5.2).

4.3.9 FM Deviation Adjustment

Connect RF analyzer to RF output socket 15. Set SMPD to 100-MHz carrier frequency, 0-dBm RF level, 100-kHz FM deviation and 41.58-kHz modulation frequency. Display output signal on analyzer set to 250-kHz span and 3-kHz resolution. Minimize residual carrier with R31 on Y2 (< -50 dBc).

Set SMPD to 690-MHz carrier frequency, 40-kHz deviation and 0.2-kHz modulation frequency. Connect oscilloscope or AF voltmeter (Ri > 1 MΩ) to MP14 on Y7. Test point is accessible from outside SMPD. Minimize AC voltage on MP14 with R5 in Y7.

4.4 Troubleshooting

4.4.1 Self-test

During normal operation, the self-checking program checks for faults approximately every 20 seconds and enters them in the frequency display. Each keyed input erases the fault character, which is, however, redisplayed after approximately 20 seconds. If RCL 00 (erase all special functions) is keyed, a self-check is immediately triggered. When a fault is eliminated, the corresponding character is extinguished at once. Only the fault character 5 is erased with a few seconds delay.

The fault characters have the following meanings:

- - - 1	Y7	SMPC buffer cannot synchronize.
- - - 2	Y5	135-MHz oscillator cannot synchronize.
- - - 3	Y6	195 to 202-MHz oscillator cannot synchronize.
- - - 4	Y12	control voltage for AM modulator and ALC exceeds nominal limits.
- - - 5	Y10	fault in oscillator control.
- - - 6	Y2	FM oscillator cannot synchronize.

Several fault characters can appear simultaneously as a result of a fault in one subassembly. Troubleshooting should follow the fault character sequence 2, 6, 3, 1, 5 and 4.

4.4.2 Troubleshooting Charts

The following flow charts ought to facilitate troubleshooting down to single subassembly level. See chapter 5 for diagnosis of faults in the individual subassemblies. It is to be assumed that all supply voltages have been checked and are present at their correct levels (Table 4-1).

Table 4-1

Motherboard BU100, contact	Voltage (V)	Controller (Y100) BU 500, contact	Voltage/V
6	-14 ±0.2	1.2	+22.9 ±0.1
8	-7 ±0.1	3	-12 ±0.2
10	+5.15 ±0.05	5.6	+12 ±0.1
12	+14.0 ±0.1	7	+5 ±0.2
14	+20.0 ±0.1	8 *	+12 ±0.1

* For measurements on BU 500/8 connect BU 500/4 to BU 500/7.

The levels for the interfaces between the subassemblies are given in the description of the subassemblies in chapter 5.

4.4.2.1 Switch-on Condition

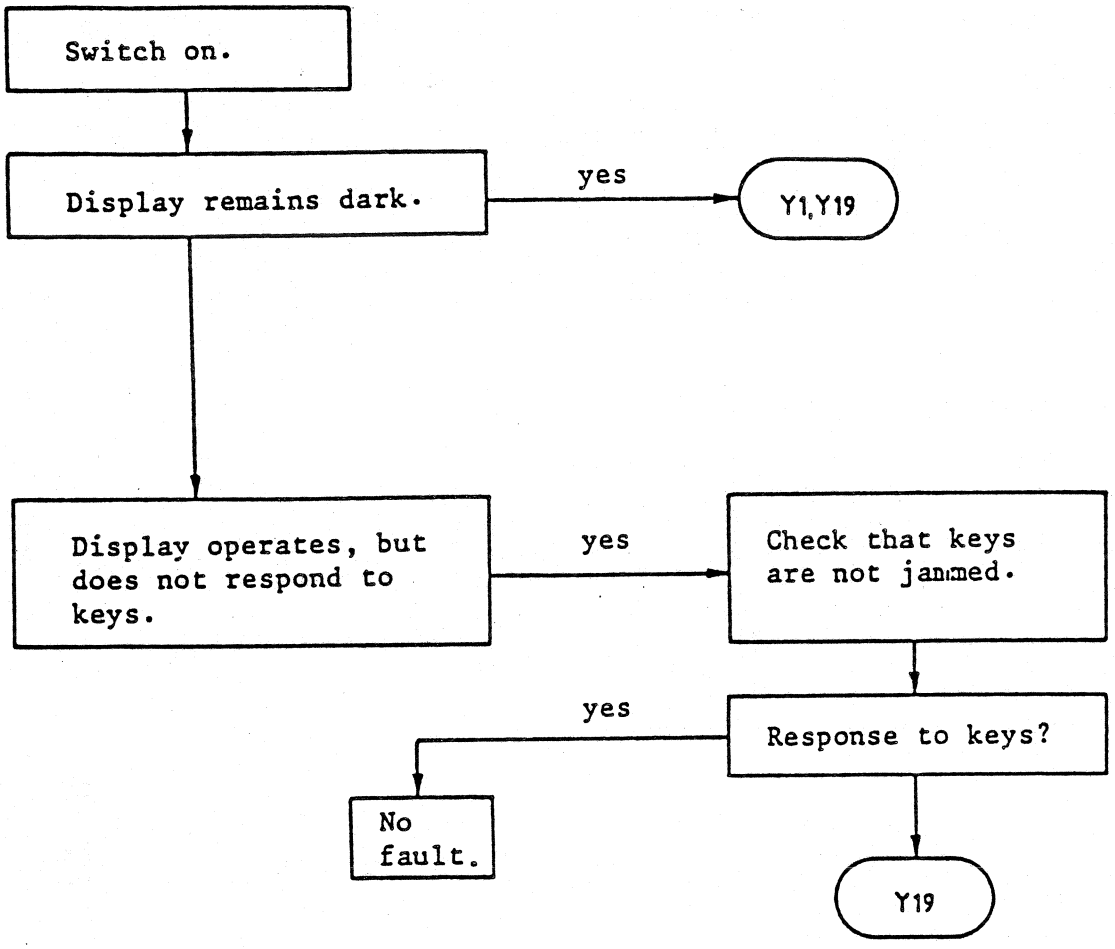

4.4.2.2 Level Fault

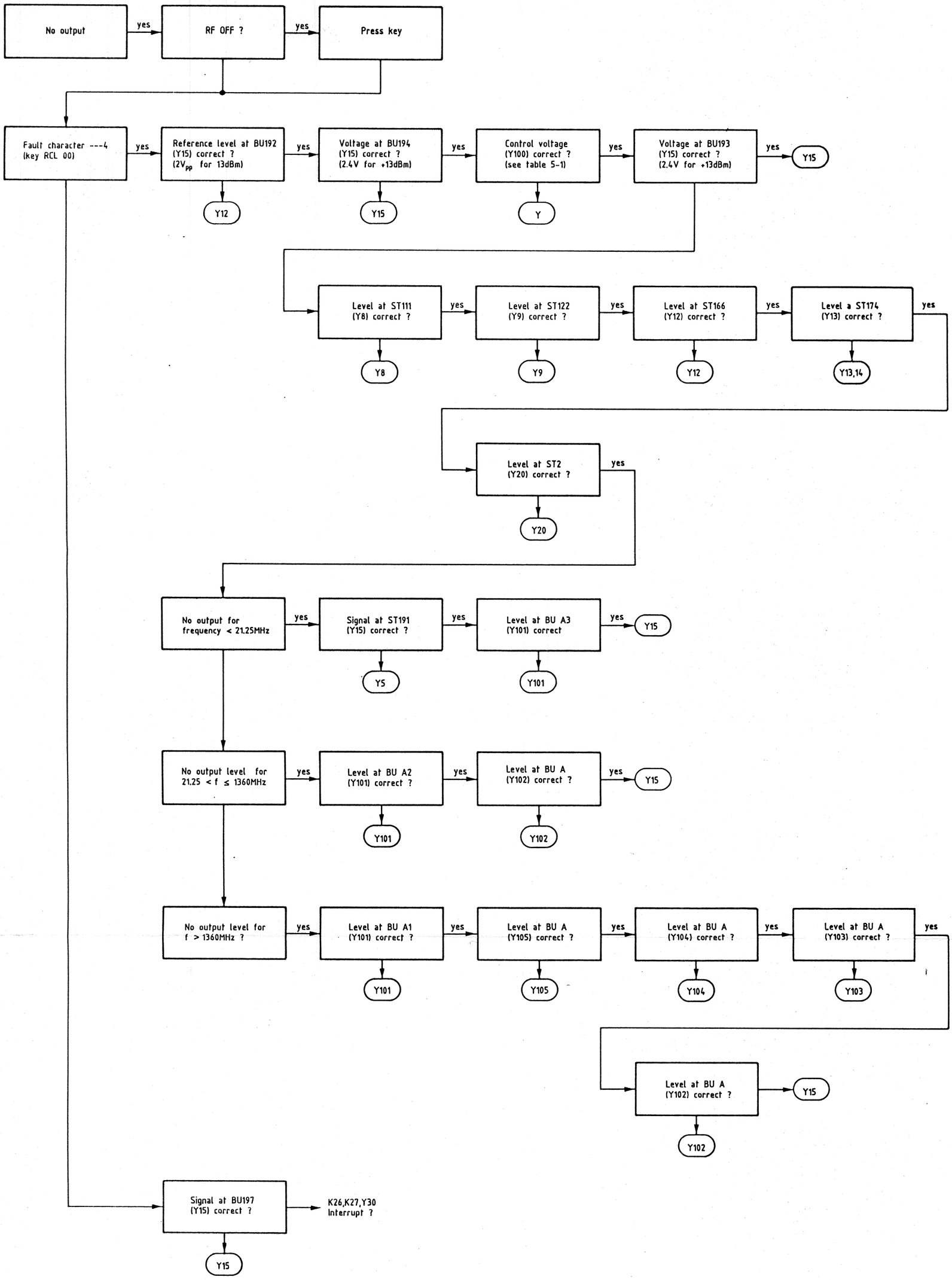

4.4.2.3 Frequency Fault, Fault Character

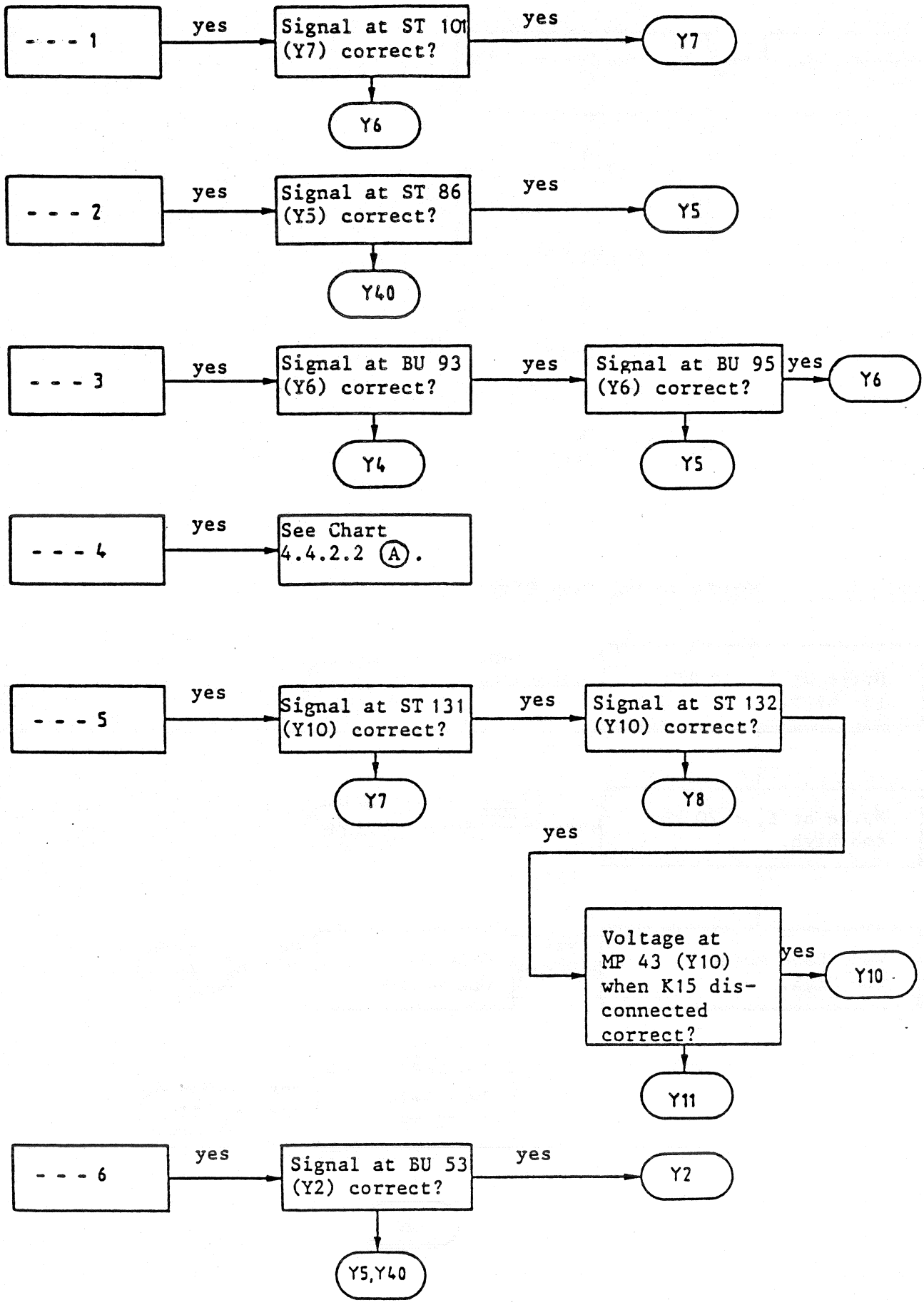

4.4.2.4 Harmonics Level too High

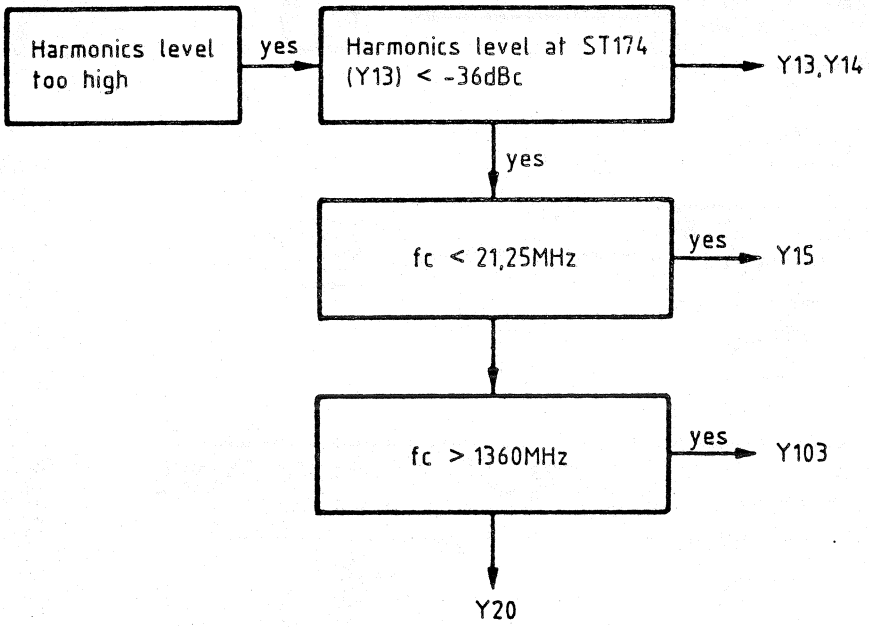

4.4.2.5 Noise Level too High

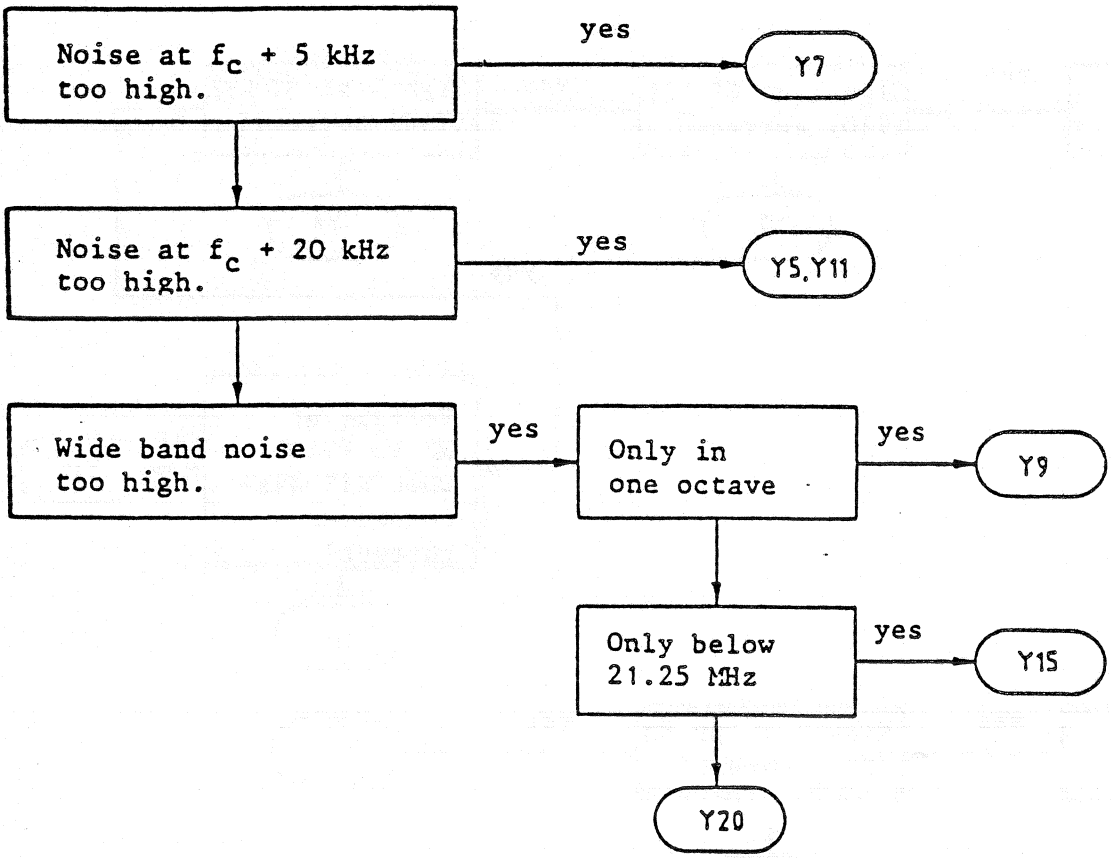

4.4.2.6 No or Distorted AM

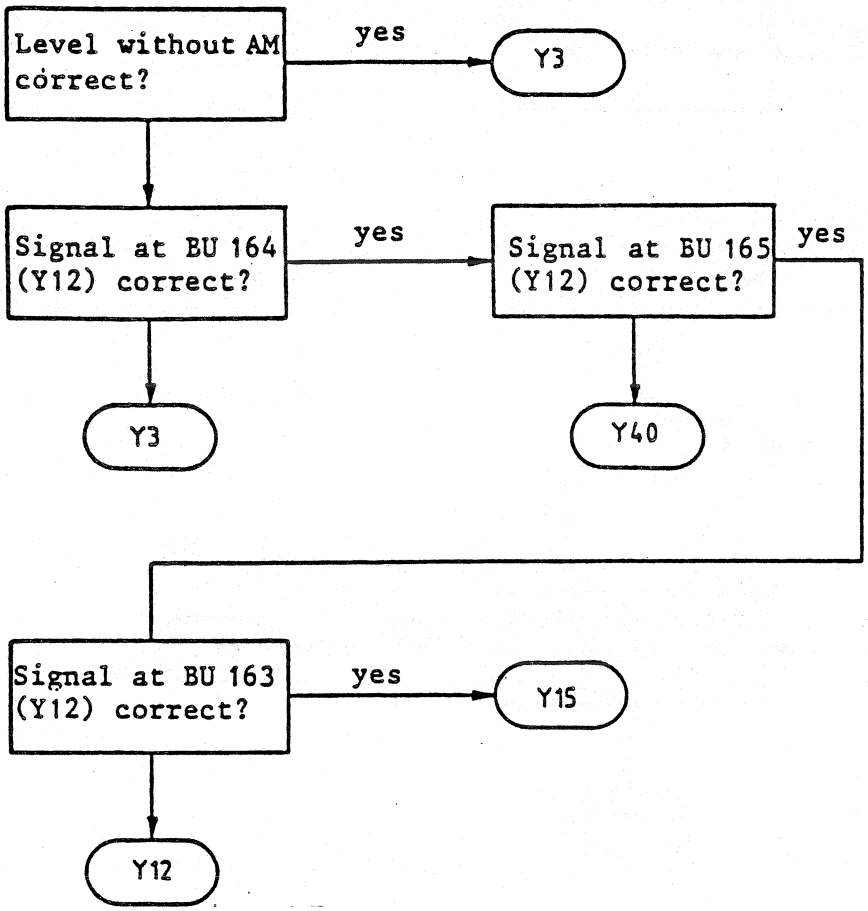

4.4.2.7 No or Distorted FM

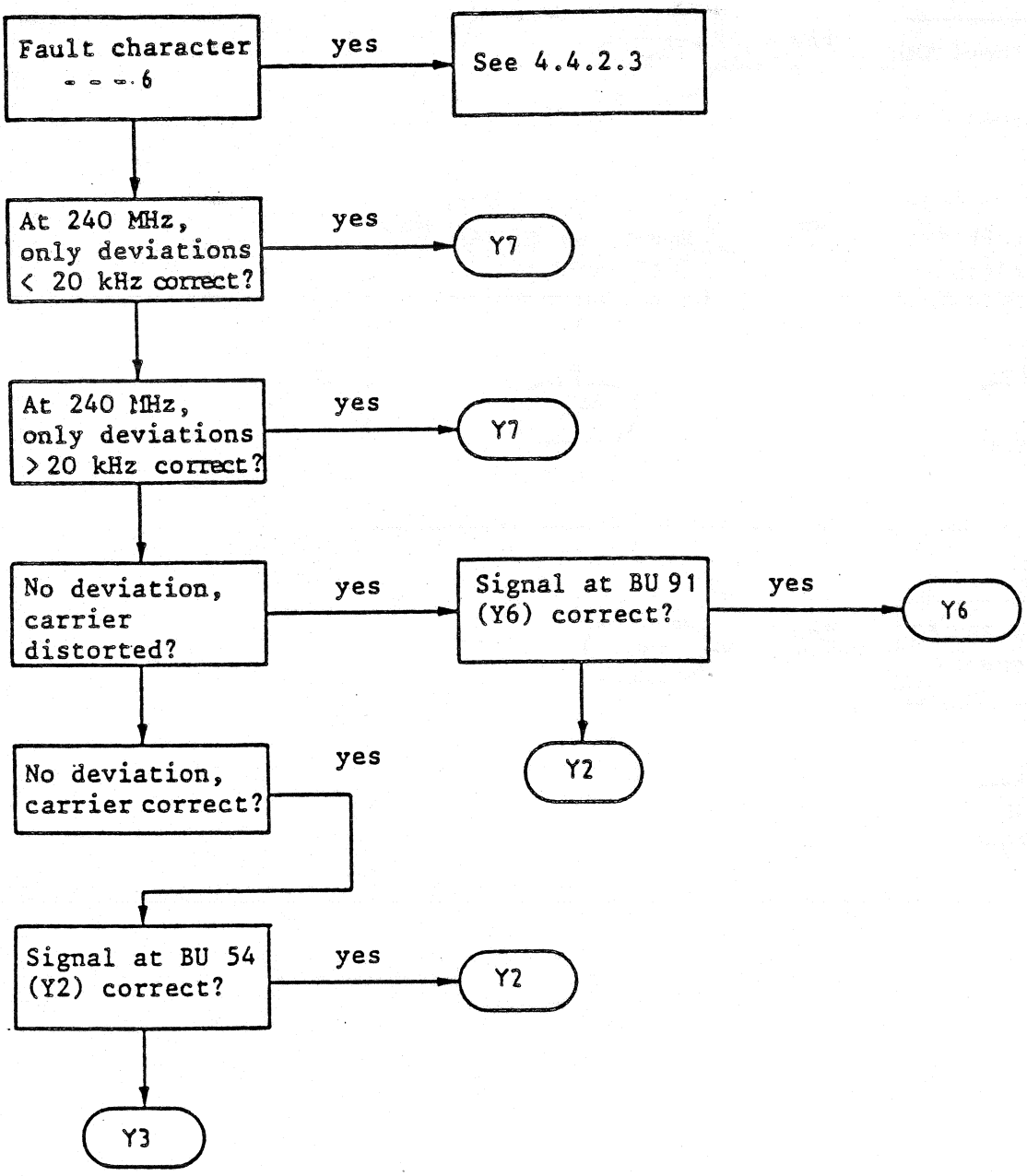

4.4.2.8 Test of Preselection in Y10 (Oscillator Control) if Output Frequency is Incorrect (Error Message 5)

On SMPD suppress selftest with RCL 09 and disconnect K11. Set the following frequencies and check the tuning voltage from Y10 on connector ST133.

f/MHz	685	760	835	905
V_{ST133}/V	2.52	7.26	11.40	15.07
f/MHz	915	990	1065	1140
V_{ST133}/V	2.44	7.27	11.41	15.26
f/MHz	1150	1225	1295	1360
V_{ST133}/V	2.61	7.61	11.44	14.61

Check frequency at equipment output. A deviation of >10 MHz to the set frequency requires retuning the oscillators in Y8 (AO I).

Adjust nominal value at 685 MHz with C 1, at 905 MHz with R47,
at 915 MHz with C12, at 1140 MHz with R48,
at 1150 MHz with C23, at 1360 MHz with R49.

After trimming the upper limit frequencies, check the lower limit frequencies and with deviations of >300 kHz repeat the adjustment.

4.4.2.9 Test of Increment Latches B9, B13, B17, B21 in Y4 (INT I) without Service EPROM if the Frequency Variation with Fine Resolution is Unsteady

The latches often fail when the subassembly is pulled out or inserted with the power on.

If the frequency at BU73 does not change steadily from 12.2 to 12.3 MHz on tuning the SMPD from 240 to 240.1 MHz, the increment latches should be tested with an oscilloscope:

Set a period sweep from 240 to 240.5 MHz in 11.111 kHz steps. All the outputs of the latches change between L and H at different repetition rates whereas B21 4Q remains permanently H.

4.4.2.10 Synchronization Fault in Y6 (INT III) for Incorrect Output Frequency (Error Message 3)

The most important testpoint is MP 50 (divider input). The level at this testpoint should not drop below -4 dBm over the whole tuning range of the oscillator (0.5 to 18 V at MP 7.1). Check using a high-impedance measuring head. If the above value is not complied with, adjustments 5.2.2 and 5.2.3 are to be checked.

4.4.2.11 Synchronization Fault in Y7 (SMPC buffer) for Deviation or Carrier Frequency Variations with FM Selected (Error Message 1)

The fault can originate from the deviation-dependent switch on and off of the buffer oscillator. This can be tested by switching the special functions RCL 98 and RCL 99 in rapid succession. If the unit is out-of-sync for more than 2 ms, the switchover will have to be checked.

When distortion is present only at low modulation frequencies and small values of deviation (test 240 MHz, 0.2 kHz AF, 19 kHz deviation), the supporting modulation is not correctly set (adjust according to 2nd paragraph of 4.3.9).

4.4.2.12 SMPD Performance Check

a) Observe sweep from 1 MHz to 1360 MHz in 3333 kHz steps on RF analyzer. Transients should show only as shortly-lived interfering lines. Frequency jumps and sidebands indicate that the unit is not functioning properly.

b) Spectrum:

Set on SMPD: 680 MHz, 10 dBm, 0.01 kHz AF, 0.01 kHz FM, AM off. Observe spectrum on RF analyzer. Rated curves and settings, see photos. Select special function RCL 98.

The noise level may increase by 6 dB max. Repeat test at 690 MHz and 699.9 MHz. If the level increase is greater than 6 dB, carry out adjustments of Y5 as under 5.2.4 and 4.3.1.

Settings on RF analyzer:

Reference level	0 dBm, 10 dB/div
Center frequency	680 MHz
Span	5 MHz
Resolution bandwidth	30 kHz
Video bandwidth	1 kHz
Sweep time	300 ms
Video average	5
Sample detector	

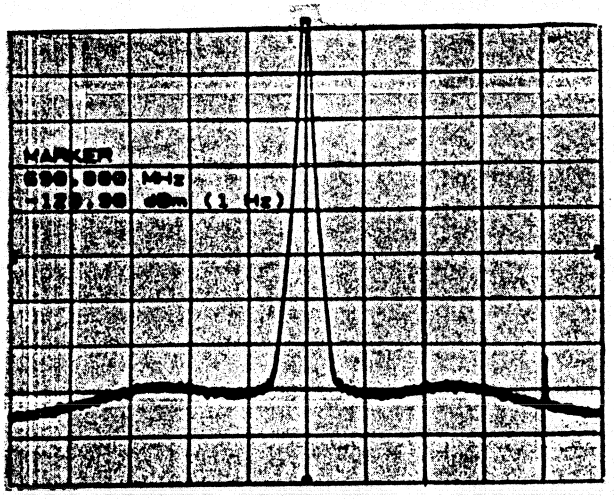

4.4.3 Signature Analysis

The digital circuits are designed for signature analysis. Descriptions of the tests and the signatures are given in the service instructions (chapter 5) for subassemblies Y1 to Y10. The test EPROMS required for this purpose are included in the Service Kit XPC-Z1.

4.5 Required Measuring Instruments and Auxiliary Equipment

Ref. No.	Instrument	Performance rating	R&S type design. and ord. numb.	See section
1	Frequency counter	Range: 0.05 to 1360 MHz resolution: 0.1 Hz		Y6, Y7, 4.3 Y10, Y5, Y8, Y40
2	RF analyzer	Range: 0.1 to 1500 MHz of crystal stability dynamic range: 90 dB		Y2, Y6, 4.3 Y4, Y5, Y8, Y9
3	Power meter	Range: 0.05 to 1360 MHz power: up to 20 mW Z = 50 Ω, error <0.1 dB resolution: <0.02 dB		Y6, 4.3 Y8, Y12
4	Precision attenuator	Range: >500 MHz attenuation: 0 to 120 dB Z = 50 Ω	DPVP 214.8017..	Y9, Y30
5	Test receiver with frequency controller	Range: 500 MHz inherent noise: <-10 dBµV	ESU 2 252.0010.. EZK 255.0010..	Y30
6	RF analyzer	Range: up to 5.5 GHz dynamic range: >40 dB		Y15, Y20 Y101, Y102 Y103, Y104 Y105
7	Signal generator	Range: up to 2720 MHz low noise	SMPD 376.8011.52	Y7,Y11, Y12, Y10, Y15, Y20, Y30, Y9 Y101-Y105
8	Switchable low-pass filter	1/2-octave filter sections: 30 MHz to 1360 MHz		Y9
9	Amplifier	Range: 20 to 1360 MHz Z = 50 Ω amplification: 20 dB freq. response <±1 dB noise figure: <8 dB		Y9
10	Process controller	IEC-625-1 interface	PPC 343.3510.. PUC 344.8900..	Y1

Ref. No.	Instrument	Performance rating	R&S type design. and ord. numb.	See section
11	Modulation analyzer	Range: up to 1360 MHz AM, FM, ΦM error: <1%	FAM 334.2015.53 FAM-B2 334.4918.02 FAM-B8 334.5714.02	Y2, Y7
12	AF generator	Range: up to 125 kHz freq. response: <0.01 dB	SPN 336.3019.02	Y2, Y3
13	AF voltmeter	Range: up to 125 kHz freq. response: <0.01 dB	URE 342.1214.02	Y2, Y3
14	Distortion meter	Range: up to 100 kHz resolution: <0.05%		Y2, Y3, Y7
15	AF counter	Range: up to 100 kHz error: $<1 \times 10^{-7}$		Y3
16	AF psophometer	Range: 15 Hz to 20 kHz rms detector	UPGS 248.0019.03	Y25
17	AF analyzer	Range: 10 Hz to 1.5 MHz dynamic range: 80 dB		Y3
18	Signature analyzer			Y1, Y10, Y19
19	Sweep tester	Range: 0.1 to 1000 MHz dynamic range: 75 dB	SWOB5 333.0019.52	Y6, Y11, Y13, Y14
20	Sampling oscilloscope	Range: up to 1.5 GHz		Y11
21	Vector analyzer	Range: 0.3 to 2000 MHz	ZPV 291.4012.92 ZPV-E3 301.7018.02	Y12, Y13, Y15, Y20
22	1/3-octave filter	Midband frequency: 100 Hz	PBT 235.3014.02	Y25
23	Service Kit XPC-Z1		337.9810.02	Chapter 4+5
24	Attenuator	Z = 50 Ω attenuation: 10 dB	DNF 272.4210.50	Y9
25	Attenuator	Z = 50 Ω attenuation: 6 dB	DNF 272.4110.50	Y9
26	Climatic test chamber	Range: 25 to 55°C		Y40

ROHDE & SCHWARZ
MÜNCHEN

Schaltteillisten
Stromläufe
Bestückungspläne

Parts lists
Circuit diagrams
Components plans

R 29500 Bl. 2

Kenn-buchst.	Art des Bauelementes	Identif.-letter	Type of component	Sym-bole	Type d'élément
FG	Koax-Umrüstsatz	FG	Coaxial screw-in assembly	FG	Ensemble vissable coaxial
FH	Koax-Übergang auf Fremdsystem	FH	Coaxial adapter	FH	Adaptateur coaxial
FJ	BNC-Systemteil	FJ	BNC srew-in assembly	FJ	Ensemble vissable BNC
FK	Koaxial-UHF-Systemteil	FK	Coaxial UHF screw-in assembly	FK	Ensemble vissable coaxial UHF
FM	Mehrfachstecker, Buchsenleiste	FM	Multipoint connector	FM	Connecteur multiple
FN	Netz-Steckverbindung	FN	AC-supply connector	FN	Connecteur secteur
FO	Runde Mehrfach-Steckverbindung	FO	Round multipoint connector	FO	Connecteur multipoles rond
FP	Druckschalt.-Steckverbindung	FP	Multipoint connector for PC boards	FP	Connecteur multipoles pour cartes imprimées
FR	Fassung für Lampe, Sicherung, usw.	FR	Socket for lamp, fuse, etc.	FR	Douille pour lampe, fusible etc. . .
FT	Schwachstrom-Steckverbindung	FT	LV plug and socket	FT	Connecteur pour faible courant
FU	Hochsp.-Steckverbindung	FU	HV plug and socket	FU	Connecteur pour haute tension
FV	Verbinder (z.B. AMP)	FV	Push-on connector	FV	Connecteur à enfichage
J	**Meßinstrumente**	**J**	**Indicators**	**J**	**Indicateurs**
JD	Drehspul-Anzeigeinstrument	JD	Moving-coil meter	JD	Galvanomètre à cadre mobile
JE	Dreheisen-Anzeigeinstrument	JE	Moving-iron meter	JE	Galvanomètre à fer mobile
JF	Frequenzmesser	JF	Frequency meter	JF	Fréquencemètre
JG	Drehspulinstrument mit Gleichrichter	JG	Moving-coil meter with rectifier	JG	Galvanomètre à cadre mobile avec redresseur
JH	Betriebstundenzähler	JH	Operating-hours counter	JH	Compteur d'heures de fonctionnement
JJ	Impulszähler	JJ	Pulse counter	JJ	Compteur d'impulsions
JK	Kleinst-Instrument, z.B. Abstimmanzeiger	JK	Mini-instrument, e.g. tuning indicator	JK	Petit indicateur, p.ex. indicateur d'accord
JM	Mechanisches Zählwerk	JM	Mechanical counter	JM	Compteur mécanique
JP	Projektions-Instrument (Leuchtziffer)	JP	Digital display	JP	Afficheur numérique
JQ	Quotientenmesser (Kreuzspul-instrument)	JQ	Ratiometer (cross coil)	JQ	Quotientmètre (à cadres croisés)
JS	Spiegelgalvanometer	JS	Reflecting galvanometer	JS	Galvanomètre à mirroir
JU	Uhrwerk	JU	Clockwork	JU	Mouvement d'horlogerie
JW	Elektrodyn. Anzeigeinstrument	JW	Electrodynamic meter	JW	Instrument électrodynamique
L	**Induktivitäten, Magnetik**	**L**	**Inductors, magnetic components**	**L**	**Composants inductifs et magnétiques**
LC	Keramische Spule	LC	Ceramic coil	LC	Bobine céramique
LD	Netz-, HF-Drossel, Df-Filter	LD	Choke, lead-through filter	LD	Self de choc, filtre de traversée
LE	Einzelkreis, Bandfilter	LE	Single tuned circuit, bandpass filter	LE	Circuit accordé, filtre passe-bande
LP	Permanentmagnet	LP	Permanent magnet	LP	Aimant permanent
LT	Netztransformator	LT	Power transformer	LT	Transformateur secteur
LU	NF-Übertrager	LU	AF transformer	LU	Transformateur BF
LV	Variometer	LV	Variometer	LV	Variomètre
R	**Widerstände**	**R**	**Resistors**	**R**	**Résistances**
RD	Drahtwiderstand	RD	Wire-wound resistor	RD	Résistance bobinée
RF	Kohleschicht-Widerstand	RF	Carbon-film resistor	RF	Résistance à couche de carbone
RG	Metallglasur-Widerstand	RG	Metal-coated resistor	RG	Résistance à couche métallique
RJ	Metalloxyd-Widerstand	RJ	Metal-oxide resistor	RJ	Résistance à oxyde métallique
RL	Metallfilm-Widerstand	RL	Metal-film resistor	RL	Résistance à film métallique
RM	Widerstandsdraht	RM	Resistance wire	RM	Fil de résistance
RN	Widerstandsnetzwerk	RN	Resistor network	RN	Réseau de résistance
RR	Draht-Potentiometer	RR	Wire-wound potentiometer	RR	Potentiomètre bobiné
RS	Schicht-Potentiometer	RS	Carbon-film potentiometer	RS	Potentiomètre à couche

Kenn-buchst.	Art des Bauelementes	Identif.-letter	Type of component	Sym-bole	Type d'élément
RT	Dämpfungsglied, Abschluß-widerstand	RT	Attenuator, termination	RT	Atténuateur, charge
RV	Drahtwiderstand mit Abgriff	RV	Wire-wound resistor, tapped	RV	Résistance bobinée à prise
RW	Wendelpotentiometer	RW	Helical potentiometer	RW	Potentiomètre hélicoidal
S	**Schalter, Relais, Sicherungen**	**S**	**Switches, relays, fuses**	**S**	**Commutateurs, relais, fusibles**
SB	Drucktastenschalter	SB	Pushbutton switch	SB	Commutateur à touche
SD	Drehschalter	SD	Rotary switch	SD	Commutateur rotatif
SF	Kontaktfedersatz	SF	Spring contact assembly	SF	Jeu de ressorts de contact
SH	HF-Koaxialschalter, -Relais, -Teiler	SH	Coaxial RF switch, RF relay, RF attenuator	SH	Commutateur RF coaxial, relais RF, atténuateur RF
SK	Kipp-, Wipp- und Schiebeschalter	SK	Toggle switch, slide switch	SK	Commutateur à bascule, à glissière
SL	Leistungsschalter Netz/HF	SL	AC supply switch, high-power RF switch	SL	Commutateur secteur, de puissance RF
SM	Mikroschalter	SM	Microswitch	SM	Microrupteur
SN	Elektromagnet, Relais	SN	Electromagnetic relay	SN	Relais électromagnétique
SP	Leistungsrelais, Luftschütz	SP	Power relay, air-type contactor	SP	Relais de puissance, contacteur à air
SR	Reedrelais	SR	Reed relay	SR	Relais reed
SS	Sicherung, Schutzschalter	SS	Fuse, automatic cut-out	SS	Fusible, coupe-circuit automatique
ST	Thermoschalter	ST	Thermal circuit breaker	ST	Disjoncteur thermique
SU	Überspannungs-Ableiter	SU	Arrester	SU	Eclateur
SW	Wechselrichter, Näherungsschalter	SW	Inverter (DC-AC), proximity switch	SW	Inverseur (DC-AC), commutateur de proximité
SZ	Zeitschalter	SZ	Time switch	SZ	Interrupteur horaire
V	**Verbindungselemente**	**V**	**Connecting elements**	**V**	**Eléments de raccordement**
VK	Klemme, Klemmleiste	VK	Clamp, terminal strip	VK	Pince, réglette à bornes
VL	Lötöse, Stützpunkt	VL	Soldering lug	VL	Cosse à souder
VS	Schraube, Mutter, Scheibe	VS	Screw, nut, washer	VS	Vis, écrou, disque

Farbcode für Widerstände und Kondensatoren / Colour code for resistors and capacitors / Code couleur pour résistances et condensateurs

Anmerkung:
Die Wertangabe der weitgehend miniaturisierten Bauelemente erfolgt überwiegend durch Farbkennzeichnungen, deren Bedeutung der nachfolgenden Tabelle entnommen werden kann.

Note:
The electrical values of the largely miniaturized components are mainly identified by a colour code, the meaning of which can be taken from the table below.

Remarque:
Les valeurs électriques des composants fort miniaturisés sont indiquées dans la plupart des cas par un code couleur dont voici l'explication.

HINWEIS:
Im Zuge des technischen Fortschrittes setzt R&S zunehmend Metallschichtwiderstände mit 1% Toleranz anstelle von Kohleschichtwiderständen mit 5% Toleranz ein. Metallschicht-widerstände können sich dabei an Stellen befinden, an denen gemäß Schaltteilliste Kohleschichtwiderstände vorgesehen sind. Etwaige geringfügige Differenzen der Nennwerte zwischen Stromlaufplan, Schaltteilliste und Gerät liegen im zulässigen Toleranzbereich.

N. B.:
Following the state of the art R&S makes increasing use of metal-film resistors (1% tolerance) instead of carbon-film resistors (5% tolerance). Metal-film resistors may have been employed where carbon-film resistors are specified in the parts list. Any slight differences of nominal values between circuit diagram, parts list and equipment are within tolerance.

N. B.:
Suivant le progrès technique R&S utilise de plus en plus des résistances à film métallique (tolérance 1%) au lieu des résistances à couche de carbone (tolérance 5%). Des résistances à film métallique peuvent se trouver en des points où des types à couche de carbone figurent dans la liste des composants. Les différences minimes des valeurs nominales existant éventuellement entre le schéma de circuit, la liste des composants et l'appareil sont dans la marge de tolérance.

Farbe/Colour/Couleur	A	B	C	D
Schwarz/Black/Noir	-	0		
Braun/Brown/Marron	1	1	0	± 1%
Rot/Red/Rouge	2	2	00	± 2%
Orange/Orangé	3	3	000	
Gelb/Yellow/Jaune	4	4	0000	
Grün/Green/Vert	5	5	00000	± 0,5%
Blau/Blue/Bleu	6	6	000000	
Violett/Violet	7	7	-	± 0,1%
Grau/Gray/Gris	8	8	-	
Weiß/White/Blanc	9	9	-	
Gold/Doré	-	-	-	± 5%
Silber/Silver/Argenté	-	-	-	± 10%
Ohne Farbe/No colour/ Pas de couleur	-	-	-	± 20%

Anordnungsbeispiele für Examples for Exemple pour

Widerstände (R)	Kondensat. (C)
Resistors (R)	Capacitors (C)
Résistance (R)	Condensateur (C)

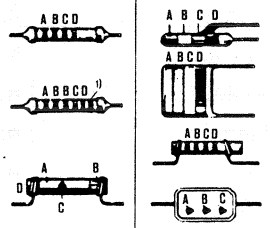

1) Toleranzring, hier nicht spezifiziert.
1) Tolerance ring, here not specified.
1) Anneau de tolérance, ne pas spécifié ici.

Definition* / Définition*

Kennzeichen A Marking A Repérage A	(Bauteilfarbe/1. Farbring) = 1. Zahl; (body colour or first coloured ring) = 1st digit; (couleur du corps ou 1er anneau) = 1er chiffre;
Kennzeichen B Marking B Repérage B	(Bauteilende/2. Farbring) = 2. Zahl; (body end or second coloured ring) = 2nd digit; (bout du corps ou 2e anneau) = 2e chiffre;
Kennzeichen C Marking C Reperage C	(Punkt/3. Farbring) = 3. Zahl = Zahl der Nullen; (dot or third coloured ring) = number of zeroes; (point ou 3e anneau) = nombre de zéros;
Kennzeichen D Marking D Reperage D	(Punkt/4. Farbring) = Toleranz des Nennwerts in %. (Fehlendes Kennzeichen für D bedeutet +20%) (dot or fourth coloured ring) + tolerance on nominal value in %. (with no D marking: tolerance ± 20%) (point ou 4e anneau) = tolérance en % de la valeur nominale. (L'absence du repérage D signifie ± 20%)

Das Fehlen eines Kennzeichens bedeutet, daß die Farbe des Bauteilkörpers die Wertangabe darstellt.
The absence of a marking signifies that the body colour gives the corresponding information.
L'absence de tout repérage signifie que la couleur du corps du composant représente la valeur correspondante.

*Siehe auch DIN 41 429 und DIN 40 825
see also IEC publication 62-1952 and 62-1968
Voir aussi DIN 41 429 et DIN 40 825.

R&S-Schlüsselliste

Die R&S-Schaltteillisten nennen in der Spalte "Benennung/Beschreibung" die technischen Daten der Bauelemente in Kurzform. Die Art des Bauelements (z. B. Schicht-, Draht-Widerstand usw.) beschreiben die 2 Kennbuchstaben vor der "Benennung" (evtl. auch vor der "Sachnummer"), die nachfolgend erklärt werden. In Ersatzteil-Bestellungen an R&S ist stets die Angabe der vollständigen Sachnummer erforderlich.

R&S key list

The R&S Parts Lists give the technical data of the components in short form in the column "Benennung/Beschreibung" (designation). The type of component (e.g. depos.-carbon resistor, wire-wound resistor etc.) is indicated by 2 identification letters before the designation, possibly also before the "Sachnummer" (order number), which are explained below. When ordering spare parts from R&S, the complete order number must always be specified.

Liste des symboles de référence R&S

La colonne «Désignation/description» des listes de pièces de R&S indique les caractéristiques des éléments sous forme abrégée. Le type d'élément (p. ex. résistance à couche, résistance bobinée etc. . .) est décrit par les deux lettres précédant la désignation (et éventuellement le numéro de référence), dont voici l'explication. Prière d'indiquer le numéro de référence («Sachnummer») complet dans toute commande de pièces de rechange.

Kenn-buchst.	Art des Bauelementes	Identif.-letter	Type of component	Sym-bole	Type d'élément
A	**Aktive Bauelemente, Halbleiter**	**A**	**Active components, semiconductors**	**A**	**Composants actifs, semiconducteurs**
AD	Universaldiode, z.B. Gleichrichter, Sperrdiode	AD	General-purpose diode, e.g. rectifier, high-resistance diode	AD	Diode d'usage général, p.ex. redresseur, diode à haute resistance
AE	Spezialdiode, z.B. Tunnel-, Kapazitäts-, Zener-Diode	AE	Diode (special), e.g. tunnel diode, varactor, Zener diode	AE	Diode spéciale, p.ex. diode tunnel, varactor, diode Zener
AF	Fotoelement, z.B. Foto-Diode, -Transistor, -Widerstand, Leucht-diode	AF	Ligth-sensitive component, e.g. resistor, diode, transistor; LED	AF	Composant photoélectrique, p.ex. diode, transistor, resistance photoél., D.E.L.
AG	Leistungs-Gleichrichter, z.B. Thyristor, Triac, Selengleichrichter	AG	Power rectifier, e.g. thyristor, triac, selenium rectifier	AG	Redresseur de puissance, p.ex. thyristor, triac, redresseur au sélénium
AK	Kleinsignal-Transistor	AK	Low-power transistor	AK	Transistor faible puissance
AL	Leistungs-Transistor	AL	High-power transistor	AL	Transistor grande puissance
AM	Spezial-Transistor, z.B. FET, MOSFET	AM	Transistor (special), e.g. FET, MOS-FET	AM	Transistor spécial, p.ex. TEC, MOSTEC
AP	Peltier-, Hall-Element	AP	Peltier element, Hall element	AP	Element Peltier, élement Hall
AR	Röhre für Empfänger, Verstärker, Gleichrichter	AR	Valve for receiver, amplifier, rectifier	AR	Tube pour récepteur, amplificateur, redresseur
AS	Spezialröhre, z.B. Senderöhre, EW-Widerstand, Stabilisator	AS	Valve (special), e.g. for transmitter: baretter, ballast valve	AS	Tube (spécial), p.ex. pour émetteur, résistance fer-hydrogène, ballast
AT	Katodenstrahlröhre, z.B. Bildröhre, Ziffern-Anzeigeröhre	AT	Cathode ray tube, e.g. picture tube, digital indicator tube	AT	Tube à rayon cathodique, p.ex. tube à image, tube à affichage numérique
AW	Spannungs- oder temperaturab-hängiger Widerstand	AW	Voltage- or temperature-dependent resistor	AW	Varistance ou thermist-ance
B	**Bausteine**	**B**	**PC boards, chips**	**B**	**Cartes imprimées, puces**
BC	Integr. Schaltkreis (Microcomp.)	BC	Integrated circuit (interface, A/D)	BC	Circuit intégré (microprocesseur)
BD	R&S-Dünnschichtschaltung	BD	R&S thinfilm circuit	BD	Circuit à couche mince R&S
BG	Gerätebaugruppe	BG	Subassembly	BG	Sous-ensemble
BJ	Integr. Schaltkreis (Interface, A/D-Wandler)	BJ	Integrated circuit (interface, A/D converter)	BJ	Circuit intégré (interface, convertisseur A/N)
BK	Kernspeicher, Magnetspeicher	BK	Core memory, magnetic memory	BK	Mémoire à tores, mémoire magnétique
BL	Log. Schaltkreis z.B. DTL, TTL, HTL, ECL, C-MOS	BL	Logic circuit, e.g. DTL, TTL,HTL, ECL, C-MOS	BL	Circuit logique, p.ex. DTL,TTL, HTL, ECL, C-MOS
BM	Hybridbaustein, z.B. Mischer, Tuner, Modulator	BM	Hybrid chip, e.g. mixer, tuner, modulator	BM	Puce hybride, p.ex. mélangeur, tuner, modulateur
BO	Analogschaltkreis, z.B. Operations-verstärker	BO	Analog circuit, e.g. operational amplifier	BO	Circuit analogique, p.ex. amplifi-cateur opérationnel
BP	Optobaustein, z.B. Anzeigeeinheit, Koppler	BP	Optoelement, e.g. display, coupler	BP	Elément optique, p.ex. afficheur, coupleur
BS	Schalt- und Steuerbaustein, elektronischer Sensor	BS	Switching and control modul, electronic sensor	BS	Modul de commutation et de commande, sonde électronique
BV	Stromversorgung, Übersp.-Schutz	BV	Power pack, protective circuit	BV	Alimentation, protection surcharge

Kenn-buchst.	Art des Bauelementes	Identif.-letter	Type of compbnent	Sym-bole	Type d'élément
C	**Kondensatoren**	**C**	**Capacitors**	**C**	**Condensateurs**
CB	Bypass-, Durchf.-Kondensator	CB	Bypass capacitor, feed-through capacitor	CB	Condensateur bypass, condensateur de traversée
CC	Keramischer Kondensator	CC	Ceramic capacitor	CC	Condensateur céramique
CD	Drehkondensator	CD	Variable capacitor	CD	Condensateur variable
CE	Elektrolytkondensator	CE	Electrolytic capacitor	CE	Condensateur électrolytique
CG	Glimmerkondensator	CG	Mica capacitor	CG	Condensateur au mica
CH	Sperrschichtkondensator	CH	Semiconductor capacitor	CH	Condensateur semiconducteur
CK	Kunstfolienkondensator	CK	Synthetic-foil capacitor	CK	Condensateur à feuille synthétique
CL	Ker. Hochsp.-Kondensator	CL	HV capacitor (ceramic)	CL	Condensateur HT céramique
CM	Metallpapier-Kondensator	CM	MP capacitor	CM	Condensateur à papier métallisé
CN	Kondensatornetzwerk	CN	Capacitor network	CN	Réseau capacitif
CP	Papierkondensator	CP	Paper capacitor	CP	Condensateur au papier
CS	Störschutzkondensator	CS	Interference-suppression capacitor	CS	Condensateur anti-parasite
CT	Trimmkondensator	CT	Trimmer capacitor	CT	Condensateur ajustable
CV	Vakuum-Kondensator	CV	Vacuum capacitor	CV	Condensateur à vide
D	**Drähte, Leitungen**	**D**	**Wires, lines**	**D**	**Fils, lignes**
DD	Schalt- und Wickeldraht	DD	Hook-up or winding wire	DD	Fil de câblage, fil de bobinage
DF	Flachleitung, Litze	DF	Flat multiple line, stranded wire	DF	Ligne plate, ligne torsadée
DG	Abgeschirmte Leitung	DG	Shielded line	DG	Ligne blindé
DH	Koaxialkabel	DH	Coaxial line	DH	Ligne coaxiale
DN	Antenne	DN	Antenna	DN	Antenne
DS	Anschlußkabel (mehradrig)	DS	Connecting cable, multicore	DS	Câble de connexion (multiconducteur)
E	**Elektrische Teile**	**E**	**Electric parts**	**E**	**Organes électriques**
EB	Blei-, NC-Akku, Batterie	EB	Lead or alkaline accumulator, battery	EB	Accumulateur Pb/NC, batterie
EF	Glühlampe, Leuchte	EF	Incandescent lamp, pilot lamp	EF	Lampe à incandescence, voyant
EG	Glimmlampe, Entladungslampe	EG	Glow lamp, discharge lamp	EG	Lampe à luminescence, lampe à décharge
EK	Kontakt-Streifen, -Feder	FK	Contact clip, contact spring	EK	Lame de contact, ressort de contact
EL	Lautspr., Kopfhörer, Mikrofon	EL	Loudspeaker, headphones, microphone	EL	Haut-parleur, casque, microphone
EM	Motor, Hubmagnet, Drehfeldsystem	EM	Motor, lifting magnet, synchro system	EM	Moteur, électro- aimant de levage, système synchro
EO	Oszillator, z.B. Quarzoszillator	EO	Oscillator, e.g. crystal oscillator	EO	Oscillateur, p.ex. oscillateur à quartz
EP	Tief-, Band-, Hochpaß, Bandsperre, Diskriminator	EP	Lowpass, bandpass, highpass filter, band-stop filter, discriminator	EP	Filtre passe-bas, passe-bande, passe-haut, suppression de bande, discriminateur
EQ	Schwing-, Filter-Quarz	EQ	Oscillator or filter crystal	EQ	Quartz oscillateur, quartz de filtre
ER	Resonator, piezoelektr./ magnetostriktiv	ER	Resonator, piezoelectric/ magnetostrictive	ER	Résonateur piézo-électrique/ magneto-strictif
ES	Passive SHF-Bauteile	ES	Passive SHF-components	ES	Composant SHF passif
ET	Thermostat	ET	Thermostat	ET	Thermostat
EV	Lüfter, Gebläse	EV	Ventilator, blower	EV	Ventilateur, soufflerie
F	**Fassungen, Steckverbindungen**	**F**	**Sockets, connectors**	**F**	**Douilles, connecteurs**
FA	Dezifix/Prezifix A	FA	R&S coaxial connector Dezifix/Precifix A	FA	Dezifix, Prezifix A
FB	Dezifix B	FB	R&S coaxial connector Dezifix B	FB	Dezifix B
FC	Dezifix C	FC	R&S coaxial connector Dezifix C	FC	Dezifix C
FD	Dezifix D	FD	R&S coaxial connector Dezifix D	FD	Dezifix D
FE	Dezifix E/J	FE	R&S coaxial connector Dezifix E/J	FE	Dezifix E/J
FF	Dezifix F	FF	R&S coaxial connector Dezifix F	FF	Dezifix F

Zusammenstellung der lieferbaren Netzkabel
List of power cables available
Liste des câbles d'alimentation disponibles

Sach-Nr. Stock No. Référence	Schutzkontaktstecker nach: Earthed-contact connector: Fiche à contact de protection:	Vorzugsweise verwendet in: Preferably used in: Utilisé de préférence en:
DS 006.7013	BS 1363: 1967' 13A entspr. IEC 83: 1975 Standard B2 BS 1363: 1967' 13A complying with IEC 83: 1975 Standard B2 BS 1363: 1967' 13A suivant CEI 83: 1975 norme B2	GB Great Britain Grande-Bretagne
DS 006.7020	Typ 12 nach SEV-Vorschrift 1011.1059, Normblatt S24507 Type 12 complying with SEV regulation 1011.1059, standard sheet S24507 Type 12 suivant la norme SEV 1011.1059, feuille S24507	Schweiz Switzerland Suisse
DS 006.7036	Typ 498/13 nach USA-Vorschrift UL 498, bzw. IEC 83 Type 498/13 complying with US regulation UL 498 or with IEC 83 Type 498/13 suivant la norme E.U.A UL 498 ou la norme CEI 83	USA/Kanada USA/Canada E.U.A./Canada
DS 006.7107	Typ SAA3 10 A, 250 V, nach AS C112-1964 Ap. Type SAA3 10 A, 250 V, complying with AS C112-1964 Ap. Type SAA3 10 A, 250 V, suivant AS C112-1964 Ap.	Australien Australia Australie
DS 025.2365	DIN 49441, 10 A, 250 V	Europa (ohne Schweiz) Europe (Switzerland not included) Europe (Suisse non comprise)

Kennzeichen / Component No.	Benennung/Beschreibung / Designation	Sachnummer / Stock No.	enthalten in / contained in
BU40	FM BUCHSENLEISTE 50POL 50-SOCKET INSERT AMPHENOL 225-22521-410 117	300.6953	300.5670
BU41	FM BUCHSENLEISTE 50POL 50-SOCKET INSERT AMPHENOL 225-22521-410 117	300.6953	300.5670
BU50	FM BUCHSENLEISTE 44POL. 44-SOCKET INSERT AMPHENOL 225-22221-410 117	300.6947	300.5670
BU60	FM BUCHSENLEISTE 44POL. 44-SOCKET INSERT AMPHENOL 225-22221-410 117	300.6947	300.5670
BU70	FM BUCHSENLEISTE 44POL. 44-SOCKET INSERT AMPHENOL 225-22221-410 117	300.6947	300.5670
BU80	FM BUCHSENLEISTE 44POL. 44-SOCKET INSERT AMPHENOL 225-22221-410 117	300.6947	300.5670
BU90	FM BUCHSENLEISTE 44POL. 44-SOCKET INSERT AMPHENOL 225-22221-410 117	300.6947	300.5670
BU100	FM BUCHSENLEISTE 44POL. 44-SOCKET INSERT AMPHENOL 225-22221-410 117	300.6947	300.5670
BU110	FM BUCHSENLEISTE 44POL. 44-SOCKET INSERT AMPHENOL 225-22221-410 117	300.6947	300.5670
BU120	FM BUCHSENLEISTE 44POL. 44-SOCKET INSERT AMPHENOL 225-22221-410 117	300.6947	300.5670
BU130	FM BUCHSENLEISTE 44POL. 44-SOCKET INSERT AMPHENOL 225-22221-410 117	300.6947	300.5670
BU140	FM BUCHSENLEISTE 44POL. 44-SOCKET INSERT AMPHENOL 225-22221-410 117	300.6947	300.5670
BU160	FM BUCHSENLEISTE 44POL. 44-SOCKET INSERT AMPHENOL 225-22221-410 117	300.6947	300.5670
BU170	FM BUCHSENLEISTE 44POL. 44-SOCKET INSERT AMPHENOL 225-22221-410 117	300.6947	300.5670
BU180	FM BUCHSENLEISTE 44POL. 44-SOCKET INSERT AMPHENOL 225-22221-410 117	300.6947	300.5670
BU190	FM BUCHSENLEISTE 44POL. 44-SOCKET INSERT AMPHENOL 225-22221-410 117	300.6947	300.5670
BU270	FR IC-FASSUNG 16 POLIG 16-PIN IC-SOCKET PRECICONT US016T	FR 249.6091	300.5670
BU271	FR IC-FASSUNG 16POL.ABGEW IC SOCKET AUGAT 516-AG7D	FR 565.1312	300.5670

Für diese Unterlage behalten wir uns alle Rechte vor

ROHDE&SCHWARZ	Äl	Datum Date	Schaltteilliste für Parts list for	Sachnummer Stock No.	Blatt Page
	11	1086	SMPD SIGNAL-GENERATOR SMPD SIGNAL GENERATOR	376.8011.01 SA	2

Kennzeichen Component No.	Benennung/Beschreibung Designation	Sachnummer Stock No.	enthalten in contained in
BU501	DX BUCHSENEINHEIT CONNECTOR UNIT	376.9618	376.9118.01
C501	CC 10NF-20+50%7X8R4000 CAPACITOR VALVO 2222 63051 64051103	CC 087.7525	376.9118.01
C502	CC 10NF-20+50%7X8R4000 CAPACITOR VALVO 2222 63051 64051103	CC 087.7525	376.9118.01
C503	CC 10NF-20+50%7X8R4000 CAPACITOR VALVO 2222 63051 64051103	CC 087.7525	376.9118.01
K4	DX HF-KABEL RF CABLE	376.9682	
K8	DX HF-KABEL RF-CABLE	300.9317	
K9	DX HF-KABEL RF-CABLE	300.9323	
K11	DX HF-KABEL RF-CABLE	300.8440	
K12	DX HF-KABEL RF-CABLE	356.0473	
K13	DX HF-KABEL RF-CABLE	300.8179	
K14	DX HF-KABEL RF-CABLE	300.8185	
K15	DX HF-KABEL RF-CABLE	300.8191	
K16	DX HF-KABEL RF-CABLE	300.8204	
K17	DX HF-KABEL RF-CABLE	300.8210	
K18	DX HF-KABEL RF-CABLE	300.8227	
K19	DX HF-KABEL RF-CABLE	300.8233	
K20	DX HF-KABEL RF-CABLE	300.8240	
K21	DX HF-KABEL RF-CABLE	300.8256	
K23	DX HF-KABEL RF-CABLE	300.8279	
K24	DX HF-KABEL RF-CABLE	300.8285	
K26	DX HF-KABEL RF-CABLE	300.8304	
K31	DX HF-KABEL RF-CABLE	300.8704	
K300	DX FLACHBANDKABEL RIBBON CABLE	300.8010	300.5670
K502	DX KABEL CABLE	376.9624	
K510	FJ KUPPLUNG ST/ST SMA RADIALL	FJ 513.1728	376.9118.01

095 0026-0586

Kennzeichen Component No.	Benennung/Beschreibung Designation	Sachnummer Stock No.	enthalten in contained in
K511	DX HF-KABEL	376.9901	376.9118.01
K512	DX HF-KABEL RF CABLE	376.9924	376.9118.01
K513	DX HF-KABEL RF CABLE	376.9930	376.9118.01
K514	DX HF-KABEL RF CABLE	377.0014	
K515	DX HF-KABEL RF CABLE	377.0037	
K516	FJ KUPPLUNG ST/ST SMA RADIALL	FJ 513.1728	376.9118.01
K517	DX HF-KABEL RF CABLE	377.0043	
ST20	FP INDIREKT.STECKERL.36P. PIN CONNECTOR BERG 75160-102-36	FP 242.3600	300.5670
ST31	FJ EINBAUWINKELST.SYS.SMB PLUG SUHNER	FJ 063.5180	300.5670
ST32	FJ EINBAUWINKELST.SYS.SMB PLUG SUHNER	FJ 063.5180	300.5670
ST33	FJ EINBAUWINKELST.SYS.SMB PLUG SUHNER	FJ 063.5180	300.5670
ST34	FJ EINBAUSTECKER SYST.SMB PLUG ROSENBERGE 59S 101-400D2	FJ 063.5168	300.5670
ST35	FJ EINBAUSTECKER SYST.SMB PLUG ROSENBERGE 59S 101-400D2	FJ 063.5168	300.5670
ST51	FJ EINBAUSTECKER SYST.SMB PLUG ROSENBERGE 59S 101-400D2	FJ 063.5168	300.5670
ST52	FJ EINBAUSTECKER SYST.SMB PLUG ROSENBERGE 59S 101-400D2	FJ 063.5168	300.5670
ST53	FJ EINBAUSTECKER SYST.SMB PLUG ROSENBERGE 59S 101-400D2	FJ 063.5168	300.5670
ST54	FJ EINBAUSTECKER SYST.SMB PLUG ROSENBERGE 59S 101-400D2	FJ 063.5168	300.5670
ST61	FJ EINBAUSTECKER SYST.SMB PLUG ROSENBERGE 59S 101-400D2	FJ 063.5168	300.5670
BIS/TO ST66			
ST72	FJ EINBAUSTECKER SYST.SMB PLUG ROSENBERGE 59S 101-400D2	FJ 063.5168	300.5670
ST73	FJ EINBAUSTECKER SYST.SMB PLUG ROSENBERGE 59S 101-400D2	FJ 063.5168	300.5670

Für diese Unterlage behalten wir uns alle Rechte vor

Kennzeichen Component No.	Benennung/Beschreibung Designation	Sachnummer Stock No.	enthalten in contained in
ST81	FJ EINBAUSTECKER SYST.SMB PLUG ROSENBERGE 59S 101-400D2	FJ 063.5168	300.5670
ST91	FJ EINBAUSTECKER SYST.SMB PLUG ROSENBERGE 59S 101-400D2	FJ 063.5168	300.5670
ST93	FJ EINBAUSTECKER SYST.SMB PLUG ROSENBERGE 59S 101-400D2	FJ 063.5168	300.5670
ST95	FJ EINBAUSTECKER SYST.SMB PLUG ROSENBERGE 59S 101-400D2	FJ 063.5168	300.5670
ST101	FJ EINBAUSTECKER SYST.SMB PLUG ROSENBERGE 59S 101-400D2	FJ 063.5168	300.5670
ST161	FJ EINBAUSTECKER SYST.SMB PLUG ROSENBERGE 59S 101-400D2	FJ 063.5168	300.5670
BIS/TO ST165 ST192	FJ EINBAUSTECKER SYST.SMB PLUG ROSENBERGE 59S 101-400D2	FJ 063.5168	300.5670
BIS/TO ST194 ST401	FV FLACHSTECKER GR.6,3 FLAT-CABLE PLUG VOGT 3866A/MS-SN8	FV 530.5457	300.5670
ST402	FV FLACHSTECKER GR.6,3 FLAT-CABLE PLUG VOGT 3866A/MS-SN8	FV 530.5457	300.5670
ST403	FP INDIREKT.STECKERL.36P. PIN CONNECTOR BERG 75160-102-36	FP 242.3600	300.5670
ST350A	FP INDIREKT.STECKERL.36P. PIN CONNECTOR BERG 75160-102-36	FP 242.3600	300.5670
ST350B	FP INDIREKT.STECKERL.36P. PIN CONNECTOR BERG 75160-102-36	FP 242.3600	300.5670
ST400A	FP INDIREKT.STECKERL.36P. PIN CONNECTOR BERG 75160-102-36	FP 242.3600	300.5670
ST400B	FP INDIREKT.STECKERL.36P. PIN CONNECTOR BERG 75160-102-36	FP 242.3600	300.5670
Y1	ED RECHNER COMPUTER	356.1405.04	
Y2	ZE FM-STUFE FM STAGE	300.7014	
Y3	ZE NF-GEN U. NF-EICHLEIT. AF GENERATOR + ATTENUATOR	300.3819	
Y4	ZE INTERPOL.-SYNTHESIZ.I INTERPOL.-SYNTHESIZER I	300.2812	

095.0026-0586

Kennzeichen Component No.	Benennung/Beschreibung Designation	Sachnummer Stock No.	enthalten in contained in
Y5	ZE INTERPOL.-SYNTHESIZER INTERPO.-SYNTHESIZER II	300.7714	
Y6	ZE INTERPOL.-SYNTHESIZ. INTERPOL.-SYNTHESIZER III	300.4415	
Y7	ZE SMPC-PUFFER SMPC-BUFFER	300.3219	
Y8	ZE AUSGANGSOZILLATOR I OUTPUT OSCILLATOR I	300.3719	
Y9	ZE AUSGANGSOSZILLATOR II OUTPUT OSCILLATOR II	300.4315	
Y10	ZE OSZILLATORSTEUERUNG OSCILLATOR-CONTROL	355.9619	
Y11	ZE PHASENREGELUNG	356.0980.02	
Y12	ZE AM-MODULATOR + ALC AM MODULATOR	300.7414.02	
Y13	ZM AUSGANGSTEIL I OUTPUT STAGE I	300.2612	
Y14	ZE AUSGANGSTEIL II OUTPUT STAGE II	300.3560	
Y15	AUSGANGSTEIL III OUTPUTSTAGE III	376.9318.02	
Y19	FRONTPLATTE FRONT PANEL	376.8211.02	
Y20	ZE AUSGANGSVERSTAERKER OUTPUT AMPLIFIER	300.1816.04	
Y25	RUECKEINHEIT REAR PANEL	376.8511.02	
Y30	ZE HF-EICHLEITUNG ATTENUATION SET	377.0214	
Y100	ED ANSTEUERUNG DRIVE STAGE	376.9418.02	376.9118.01
Y101	YDS-120 DIODENSCH.1 AUS 3 YDS-120 DIODE SWITCH	914.9303.02	376.9118.01
Y102	BD PIN-DIODEN-UMSCHALTER	914.9403	376.9118.01
Y103	ZE BREITBANDVERSTAERKER	376.9199.02	376.9118.01
Y104	BD FILTERMODUL SMPD	914.9503	376.9118.01
Y105	VERDOPPLER DOUBLER	376.9501.02	376.9118.01
			- ENDE -

Für diese Unterlage behalten wir uns alle Rechte vor

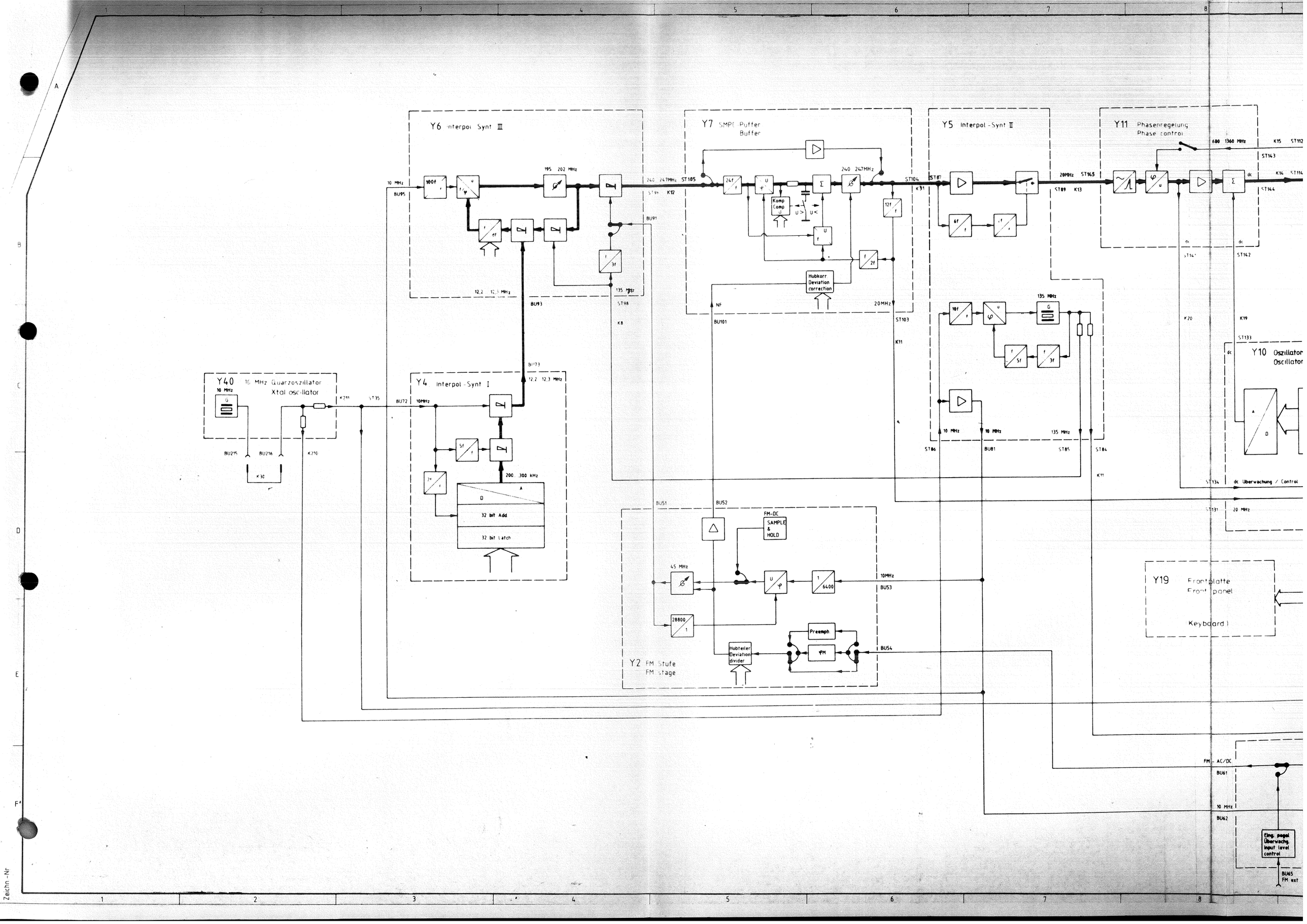

Y6 Interpol Synt III
Y7 SMPC Puffer
Buffer
Y5 Interpol-Synt II
Y11 Phasenregelung
Phase control
Y40 10 MHz Quarzoszillator
Xtal oscillator
Y4 Interpol-Synt I
Y10 Oszillator
Oscillator
Y2 FM Stufe
FM stage
Y19 Frontplatte
Front panel
Keyboard
Komp
Comp
Hubkorr
Deviation
correction
FM-DC
SAMPLE
&
HOLD
Preemph
Hubteiler
Deviation
divider
32 bit Add
32 bit Latch
dc Überwachung / Control
Eing. pegel
Überwachg.
input level
control
FM - AC/DC
BU61
BU62
BU65
FM ext

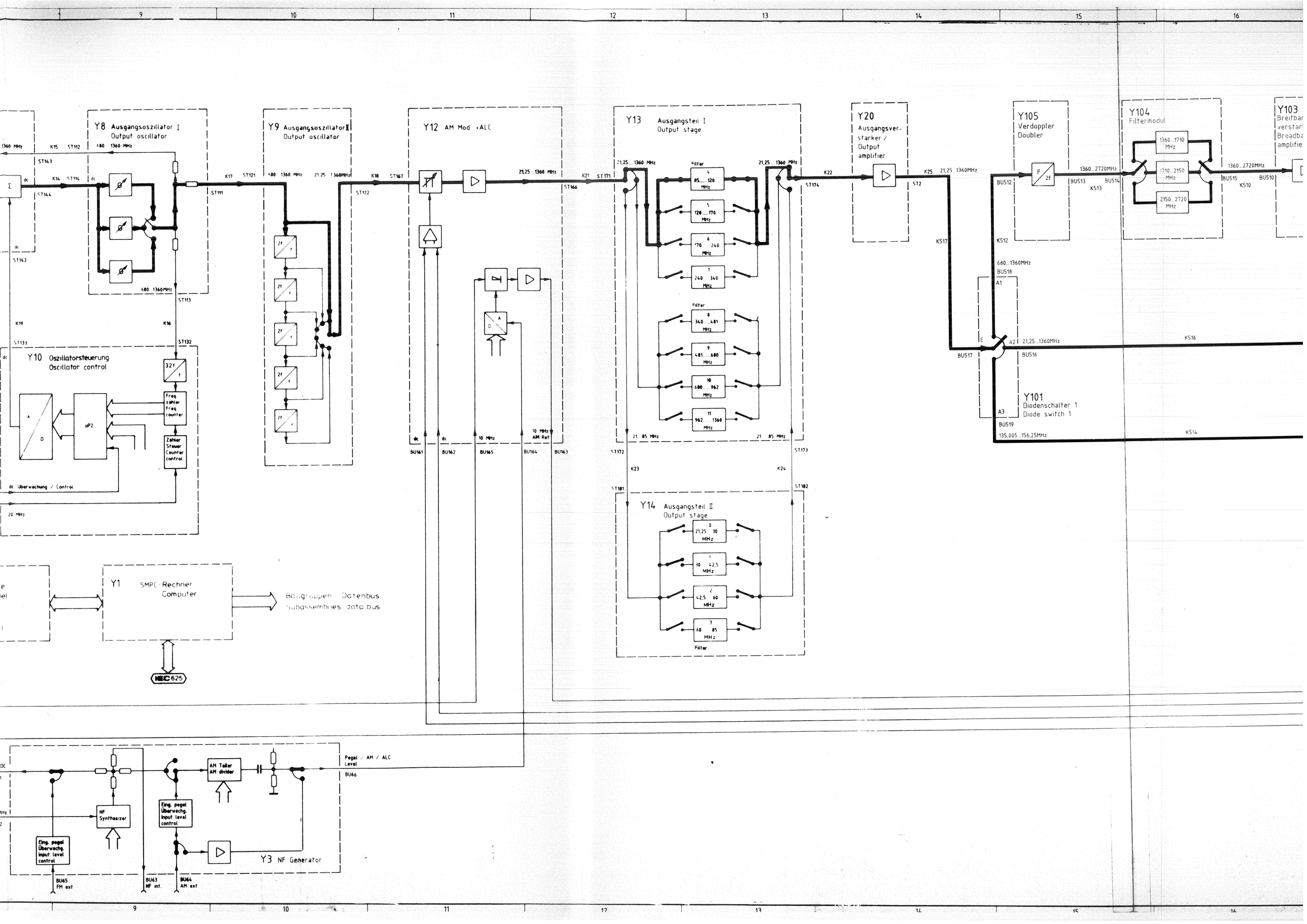

Y8 Ausgangsoszillator I
Output oscillator
Y9 Ausgangsoszillator II
Output oscillator
Y12 AM Mod +ALC
Y13 Ausgangsteil I
Output stage
Y20
Ausgangsverstärker /
Output amplifier
Y105
Verdoppler
Doubler
Y104
Filtermodul
Y103
Y10 Oszillatorsteuerung
Oscillator control
Freq zähler
Freq counter
Zähler Steuer
Counter control
uP2
dc Überwachung / Control
20 MHz
Y1 SMPC-Rechner
Computer
Baugruppen Datenbus
Subassemblies data bus
IEC 625
Y14 Ausgangsteil II
Output stage
Filter
Y101
Diodenschalter 1
Diode switch 1
Y3 NF Generator
NF Synthesizer
AM Teiler
AM divider
Eing. pegel
Überwachg.
Input level
control
Pegel / AM / ALC
Level
BU66
BU65
FM ext
BU63
NF int.
BU64
AM ext

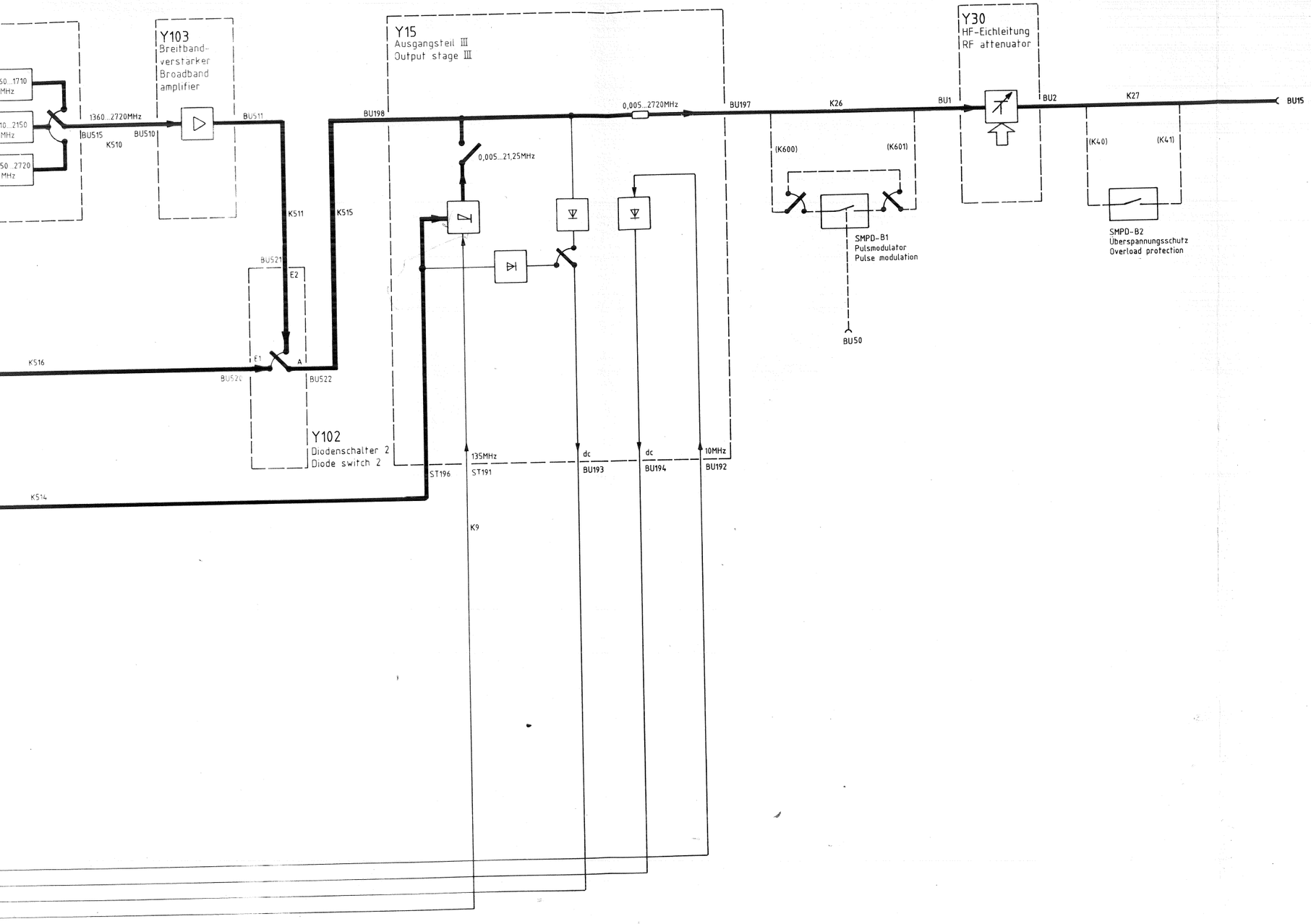

ROHDE&SCHWARZ	A	31459	6.84	IB				1KGA	Tag	Name	Benennung	Meßsender SMPD Signal generator SMPD	Z	Zeichn.-Nr. 376.8
								Bearb	4.84	CO				
								Gepr				zu Gerät: SMPD		reg. i. v. 376.8011 V
	And.-Zust.	And.-Mitteilung	Datum	Name	And.-Zust.	And.-Mitteilung	Datum	Name	Norm					

0 1 2 3
ZENTIMETER

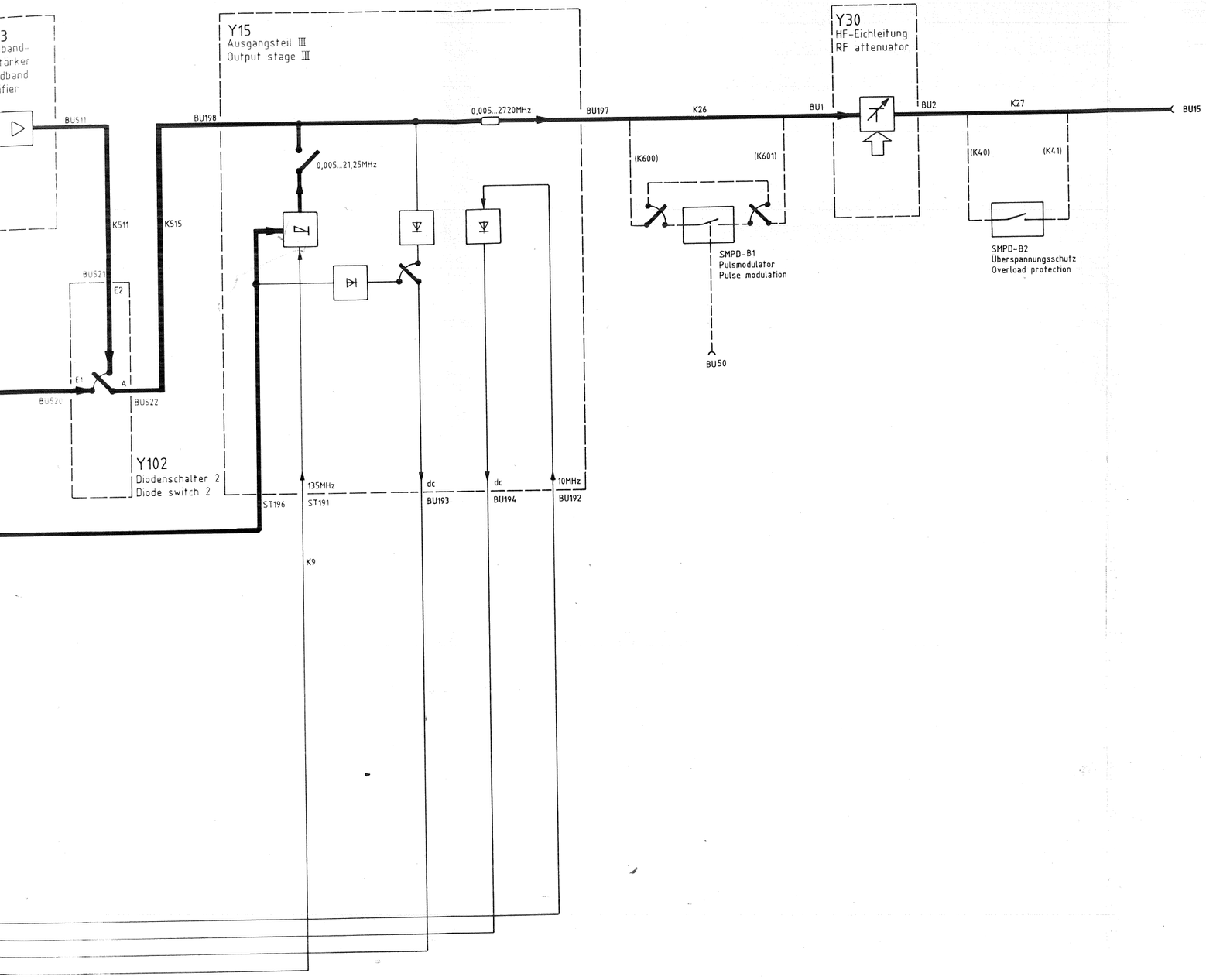

0 1 2 3
ZENTIMETER

ROHDE & SCHWARZ	A	31459	6.84	IB					1KGA	Tag	Name	Benennung	Meßsender SMPD Signal generator SMPD	Z
									Bearb	4.84	CO			
									Gepr					
	Änd. Zust.	Änd.-Mitteilung	Datum	Name	Änd. Zust.	Änd.-Mitteilung	Datum	Name	Norm				zu Gerät: SMPD	

Zeichn.-Nr. 376.8011 FS
reg. i. V. 376.8011 V
erste Z.
Blatt.-Nr.
v. Bl.

K13

K31 K11 K14 K15 K16 K17 K17 K18 K16 K11 K19 K20 K15 K14 K13

(ST105) (ST104) (ST103) (ST114) (ST112) (ST113) (ST111) (ST121) (ST122) (ST132) (ST131) (ST133) (ST134) (ST141) (ST142) (ST143) (ST144) (ST145)

240..247MHz 240MHz 20MHz

$U_{Reg.}$ $V_{contr.}$ 680-1360MHz 680-1360MHz 680-1360MHz

680-1360MHz 21-1360MHz

Teilerstufe
Divider stages

680-1360MHz 20MHz Voreinst. Presetting Überw. φ-Reg. U Monitor φ contr. V.

Überw. φ-Reg. U Monitor φ contr. V. Voreinst. Presetting 680-1360MHz $U_{Reg.}$ $V_{contr.}$ 20MHz

Y8
(s. 300.3719 S)
Ausgangsoszillator I
Output oscillator I

Y9
(s. 300.4315 S)
Ausgangsoszillator II
Output oscillator II

Y10
(s. 355.9619 S)
Oszillatorsteuerung
Oscillator control

Y11
(s. 355.9819 S)
Phasenregelung
Phase control

Mother board
300.5670

ST35 (K211) (Y40)
(s. 300.2412 S)
10 MHz-Quarzoszillator
10 MHz crystal oscillator
(K210)

ST165 ST163 ST161 ST162 ST164

(BU165) (BU163) (BU161) (BU162) (BU164)

10MHz 10MHz AM Ref. AM ref. NF-Reg.-U AF-contr.V NF-Reg.ref. AF-contr. ref. AM-NF/AF ALC

Y12
(s. 300.7414 S)
AM-Modulator + ALC
AM modulator and ALC

21...1360MHz 21...1360MHz

(ST166) (ST167)

(BU215) (BU216)

(K30)

Y14
(s. 300.3560 S)
Ausgangsteil II
Output stage II

21...85MHz 21...85MHz

(ST181) (ST182)

Y13
(s. 300.2612 S)
Ausgangsteil I
Output stage I

21...85MHz 21...85MHz 21...1360MHz 21...1360MHz

(ST173) (ST172) (ST174) (ST171)

10 MHz 0,5V / 50Ω

0,2... 2V Ri > 500 Ω

Y20

K23 K24 (K22) K21 K18

2)

Ausgangsverstärker
Output amplifier
(s. 300.1816 S)

Bl. 1 HF-Verbindungen / RF connection
Bl. 2 Steuerleitungen / Control lines

Stromlauf gilt für VAR 32, 52
Circuit diagramm is valid for model 32, 52

ROHDE & SCHWARZ MÜNCHEN			Halbzeug, Werkstoff				Unotolerierte Maße	Zeichn. Nr. 376.8011 S Bl.1
							Maßstab	376.8011 V
1KGA	Datum	Name	And. zust.	And.-Mitteilg. Nr.	Datum	Name		Ersatz f. Zeichn.
gezeichnet	4.84	GU	A	31459	5.84	CO		
bearbeitet	4.84	CO	B	31459	6.84	IB		Meßsender SMPD
geprüft			C	32900	6.85	GS		Signal generator SMPD
normgepr.								Z

(K 210)

K 13

(K210) K13 K31 K8 K9

K 8 K12 K31 K11

(ST 86) (ST 89) (ST 88) (ST 87) (ST85) (ST84)

10MHz 20 MHz 40 MHz 240 MHz 135MHz 135 MHz

(ST98) (ST96)

135 MHz 240 . . 247MHz

(ST 105) (ST104) (ST103)

240 . . 247 MHz 240MHz 20MHz

300.3819 S)
- Generator + Eichleitung
- generator and attenuator

/AF FM-NF/AF AM-NF/AF ALC 10 MHz

(BU61) (BU66) (BU62)

ST61 ST 66 ST62

Y4
(s.300.2812S)
Interpolationssynthesizer I
Interpolation synthesizer I

10MHz 12,2 . . . 12,3 MHz

(BU72) (BU73)

ST72 ST73

Y5
(s.300.7714 S)
Interpolationssynthesizer II
Interpolation synthesizer II

10MHz

(BU81)

ST 81

Y6
(s.300.4415 S)
Interpolationssynthesizer III
Interpolation synthesizer III

12,2 . . 12,3MHz 45MHz FM 10 MHz

(BU93) (BU91) (BU95)

ST93 ST91 ST95

Y7 (s.300.3219 S)
SMPC-Puffer
Buffer

Parallel Mod.

(BU101)

ST101

ST194 ST193 ST192

(BU194) (BU193) (BU192)

NF-Reg. Ref. NF-Reg. U 10MHz AM Ref.

Y15
Ausgangsteil III

0,005...2720MHz 135MHz 135,005...156,25 MHz 21,25..1360 MHz

(BU197) (ST191) (ST196) (BU198)

K9 K514

K4

IF/AF
1Veff

NF Ausgang Rückwanne
AF output rear panel

Y30
(s. 377.0214 S)
HF-Eichleitung
RF attenuator

K27 (BU2) (BU1) K26

(K40)

SMPD-B2
(s. 377.1110 S)
Überspannungsschutz
Overload protection

(K601) (K600)

BU601 BU600

SMPD-B1
(s. 377.0914 S)
Pulsmodulator
Pulse modulation

K514

Y102
Diodenschalter2
Diode switch 2

Y101
Diodenschalter 1
Diode switch 1

K515 K516

BU520 BU521 BU516 A2 A3 E BU517 A1 BU518

K511 K512 BU512 E

K510 K513 K517

BU511 BU510 BU515 A E BU514 BU513 A

Y103
Breitbandverstärker
Broadband amplifier

Y104
Filtermodul
Filter

Y105
Verdoppler
Doubler

Y14
(s.300.3560 S)
Ausgangsteil II
Output stage II

21...85MHz 21...85MHz

(ST181) (ST182)

K24

K23

Y20

(ST 2)

Ausgangsverstärker
Output amplifier
(s. 300.1816 S)

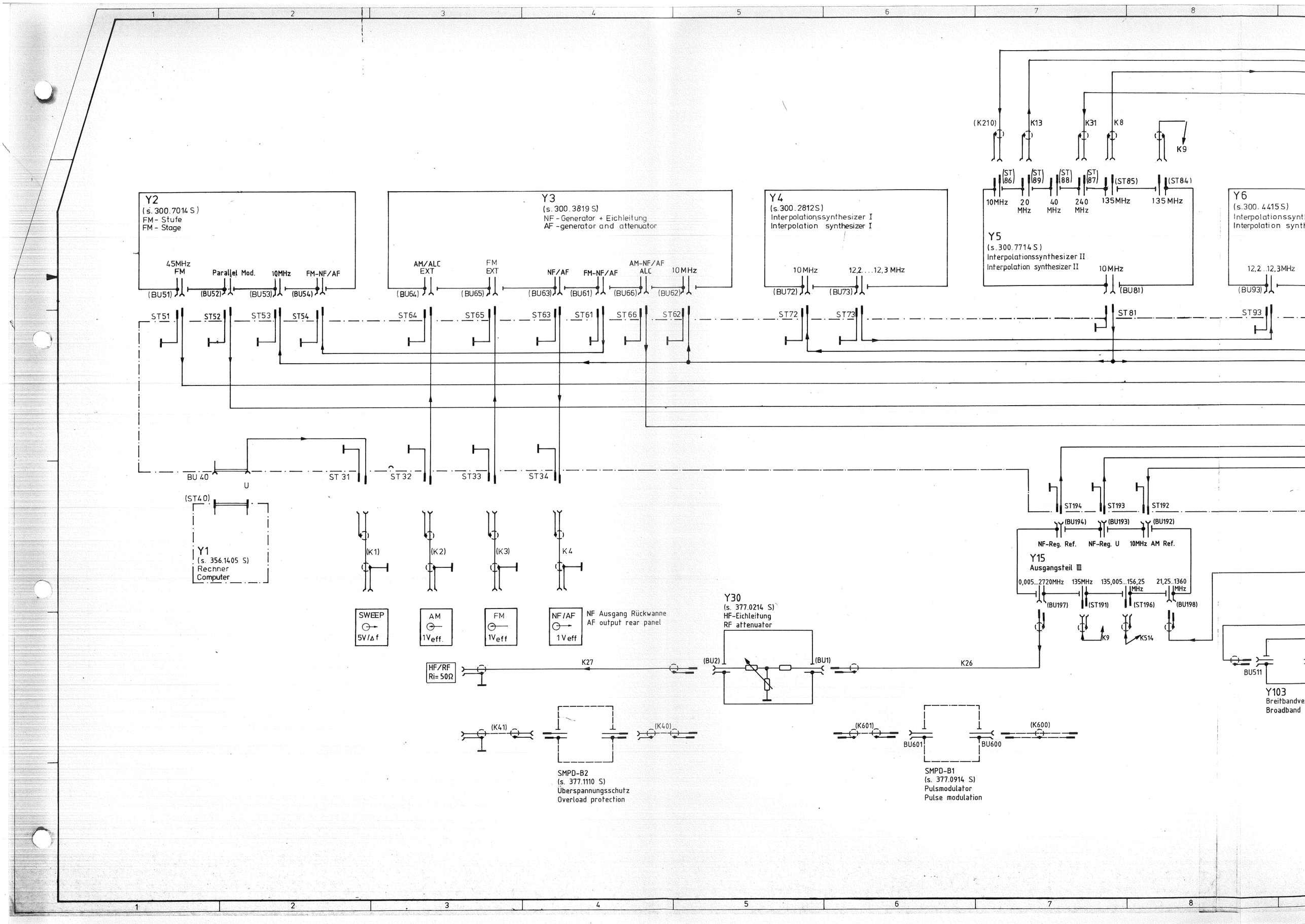

Y2
(s. 300.7014 S)
FM - Stufe
FM - Stage
45MHz FM
Parallel Mod.
10MHz
FM-NF/AF
(BU51)
(BU52)
(BU53)
(BU54)
Y3
(s. 300.3819 S)
NF - Generator + Eichleitung
AF - generator and attenuator
AM/ALC EXT
FM EXT
NF/AF
FM-NF/AF
AM-NF/AF ALC
10MHz
(BU64)
(BU65)
(BU63)
(BU61)
(BU66)
(BU62)
Y4
(s. 300.2812 S)
Interpolationssynthesizer I
Interpolation synthesizer I
10MHz
12,2....12,3 MHz
(BU72)
(BU73)
Y5
(s. 300.7714 S)
Interpolationssynthesizer II
Interpolation synthesizer II
10MHz
(BU81)
Y6
(s. 300.4415 S)
12,2..12,3MHz
(BU93)
(K210)
K13
K31
K8
K9
(ST86)
(ST89)
(ST88)
(ST87)
(ST85)
(ST84)
10MHz
20 MHz
40 MHz
240 MHz
135MHz
135 MHz
ST51
ST52
ST53
ST54
ST64
ST65
ST63
ST61
ST66
ST62
ST72
ST73
ST81
ST93
BU 40
U
ST 31
ST 32
ST33
ST34
(ST40)
Y1
(s. 356.1405 S)
Rechner
Computer
(K1)
(K2)
(K3)
K4
SWEEP
5V/Δf
AM
1Veff.
FM
1Veff
NF/AF
1Veff
NF Ausgang Rückwanne
AF output rear panel
HF/RF
Ri= 50Ω
K27
Y30
(s. 377.0214 S)
HF-Eichleitung
RF attenuator
(BU2)
(BU1)
K26
ST194
ST193
ST192
(BU194)
(BU193)
(BU192)
NF-Reg. Ref.
NF-Reg. U
10MHz AM Ref.
Y15
Ausgangsteil III
0,005...2720MHz
135MHz
135,005...156,25 MHz
21,25..1360 MHz
(BU197)
(ST191)
(ST196)
(BU198)
K9
K514
BU511
Y103
Breitbandve
Broadband
(K41)
(K40)
SMPD-B2
(s. 377.1110 S)
Überspannungsschutz
Overload protection
(K601)
BU601
BU600
(K600)
SMPD-B1
(s. 377.0914 S)
Pulsmodulator
Pulse modulation

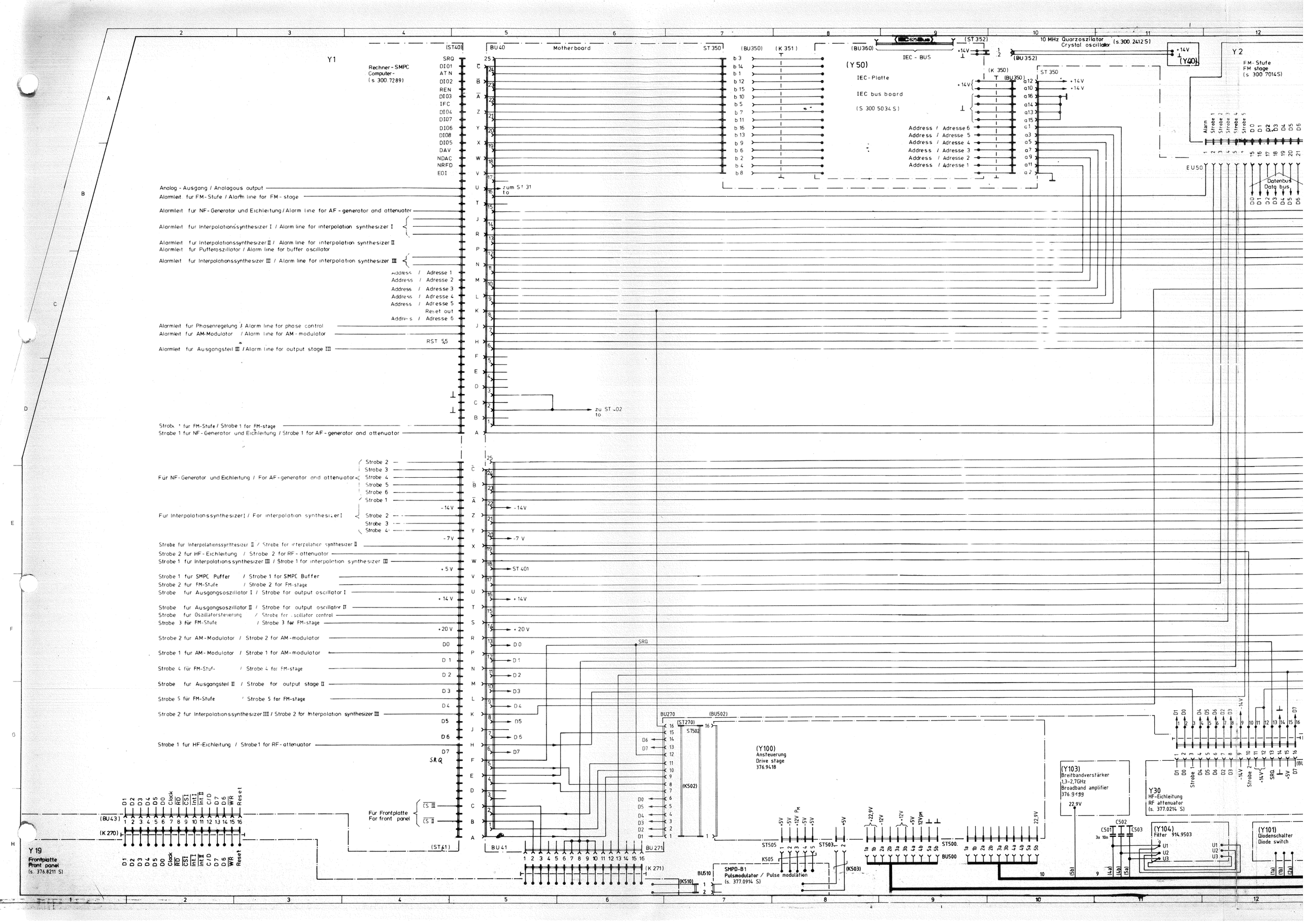

Y1
Rechner-SMPC
Computer-
(s 300.7289)
(ST40)
SRQ
DI01
ATN
DI02
REN
DI03
IFC
DI04
DI07
DI06
DI08
DI05
DAV
NDAC
NRFD
EOI
BU40
Motherboard
ST350
(BU350)
(K 351)
(BU360)
IEC - BUS
(ST352)
10 MHz Quarzoszilator
Crystal oscillator
(s.300.2412 S)
(BU352)
(Y40)
Y2
FM-Stufe
FM stage
(s 300 7014S)
(Y50)
IEC-Platte
IEC bus board
(S 300 5034 S)
(K 350)
ST 350
Address / Adresse 6
Address / Adresse 5
Address / Adresse 4
Address / Adresse 3
Address / Adresse 2
Address / Adresse 1
EU50
Datenbus
Data bus
Analog - Ausgang / Analogous output
Alarmleit. fur FM-Stufe / Alarm line for FM-stage
Alarmleit. fur NF-Generator und Eichleitung / Alarm line for AF-generator and attenuator
Alarmleit. fur Interpolationssynthesizer I / Alarm line for interpolation synthesizer I
Alarmleit. fur Interpolationssynthesizer II / Alarm line for interpolation synthesizer II
Alarmleit. fur Pufferoszillator / Alarm line for buffer oscillator
Alarmleit. fur Interpolationssynthesizer III / Alarm line for interpolation synthesizer III
Address / Adresse 1
Address / Adresse 2
Address / Adresse 3
Address / Adresse 4
Address / Adresse 5
Reset out
Address / Adresse 6
Alarmleit. fur Phasenregelung / Alarm line for phase control
Alarmleit. fur AM-Modulator / Alarm line for AM-modulator
RST 5,5
Alarmleit. fur Ausgangsteil III / Alarm line for output stage III
zum ST 31
to
zu ST 402
to
Strobe 1 fur FM-Stufe / Strobe 1 for FM-stage
Strobe 1 fur NF-Generator und Eichleitung / Strobe 1 for AF-generator and attenuator
Fur NF-Generator und Eichleitung / For AF-generator and attenuator
Strobe 2
Strobe 3
Strobe 4
Strobe 5
Strobe 6
Strobe 1
Fur Interpolationssynthesizer I / For interpolation synthesizer I
Strobe 2
Strobe 3
Strobe 4
-14 V
-7 V
Strobe fur Interpolationssynthesizer II / Strobe for interpolation synthesizer II
Strobe 2 fur HF-Eichleitung / Strobe 2 for RF-attenuator
Strobe 1 fur Interpolationssynthesizer III / Strobe 1 for interpolation synthesizer III
+5 V
ST 401
Strobe 1 fur SMPC Puffer / Strobe 1 for SMPC Buffer
Strobe 2 fur FM-Stufe / Strobe 2 for FM-stage
Strobe fur Ausgangsoszillator I / Strobe for output oscillator I
+14 V
Strobe fur Ausgangsoszillator II / Strobe for output oscillator II
Strobe fur Oszillatorsteuerung / Strobe for oscillator control
Strobe 3 für FM-Stufe / Strobe 3 for FM-stage
+20 V
Strobe 2 fur AM-Modulator / Strobe 2 for AM-modulator
Strobe 1 fur AM-Modulator / Strobe 1 for AM-modulator
Strobe 4 für FM-Stufe / Strobe 4 for FM-stage
Strobe fur Ausgangsteil II / Strobe for output stage II
Strobe 5 für FM-Stufe / Strobe 5 for FM-stage
Strobe 2 fur Interpolationssynthesizer III / Strobe 2 for Interpolation synthesizer III
Strobe 1 fur HF-Eichleitung / Strobe 1 for RF-attenuator
SRQ
Für Frontplatte
For front panel
CS III
CS II
(ST41)
BU41
BU271
(K 271)
BU270
(ST270)
(BU502)
ST502
(K502)
(Y100)
Ansteuerung
Drive stage
376.9418
(Y103)
Breitbandverstärker
1,3-2,7GHz
Broadband amplifier
376.9499
22,9V
Y30
HF-Eichleitung
RF attenuator
(s. 377.0214 S)
(Y104)
Filter 914.9503
(Y101)
Diodenschalter
Diode switch
ST505
ST503
ST500
K505
(K503)
BU510
(K510)
SMPD-B1
Pulsmodulator / Pulse modulation
(s. 377.0914 S)
BU500
(BU43)
(K 270)
Y 19
Frontplatte
Front panel
(s. 376.8211 S)

Y2
FM-Stufe
FM stage
(s. 300.7014 S)

Y3
NF-Gen. u. Eichleitung
AF generator and attenuator
(s. 300.3819 S)

Y4
Interpolationssynthesizer I
Interpolation synthesizer I
(s. 300.2812 S)

Y5
Interpolationssynthesizer II
Interpolation synthesizer II
(s. 300.7714 S)

Y6
Interpolationssynthesizer III
Interpolation synthesizer III
(s. 300.4415 S)

SMPC Puffer
Buffer
(s.300.3219 S)

Motherboard
300.5670

BU60 BU70 BU80 BU90 BU100

Datenbus
Data bus

K300

(BU300)

(ST231) BU231

SMPD-B2
Option
Überspannungs-
schutz
Overvoltage-
protection
(s. 377.1110 S)

Y20
Ausgangsverst.
Output amplifier

(K200)

ST20

ST400 ST401 ST402 ST403

(BU400) (BU401) (BU402)

BU 41.18

zu BU 40.2.3

(Y101)
Diodenschalter
Diode switch

(Y102)
Diodenschalter
Diode switch

Y25
Rückwanne
Rear panel
(s.376.8511 S)

BU 190

Y15
Ausgangsteil III
Output stage III
(s. 376.9318 S)

BU180

Y14
Ausgangsteil II
Output stage II
(s. 300.3560 S)

SMPC Puffer
Buffer
(s.300 3219 S)

Y8
Ausgangsoszillator I
Output oscillator I
(s. 300 3719 S)

Y9
Ausgangsoszillator II
Output oscillator II
(s. 300 4315 S)

Y10
Oszillatorsteuerung
Oscillator control
(s. 355.9619 S)

BU 100 BU110 BU120 BU130

Datenbus
Data bus

Motherboard
300.5670

BU170 BU160 BU140

Y14
Ausgangsteil II
Output stage II
(s. 300.3560 S)

Y13
Ausgangsteil I
Output stage I
(s. 300.2612 S)

Y12
AM-Modulator
AM modulator
(s. 300.7414 S)

Y11
Phasenregelung
Phase control
(s. 355.9819 S)

ROHDE & SCHWARZ MÜNCHEN			Halbzeug, Werkstoff				Unto lerierte Maße	Zeichn. Nr. 376.8011 S	Blatt-Nr. 2
							Maßstab	376.8011 V	376.8011
1KGA	Datum	Name	Ar.-Nr.	Änd.-Mitteig.-Nr.	Datum	Name		Ersatz f.	
gezeichn.	12.83	gu	A	31459	5.84	CO	Meßsender SMPD		
bearbeitet	12.83	co	B	32900	8.84	CO	Signal generator		
geprüft			C	32946	12.85	Ho			
normgep.									

Ansicht und Leitungsführung Bauteilseite
View of tracks on component side

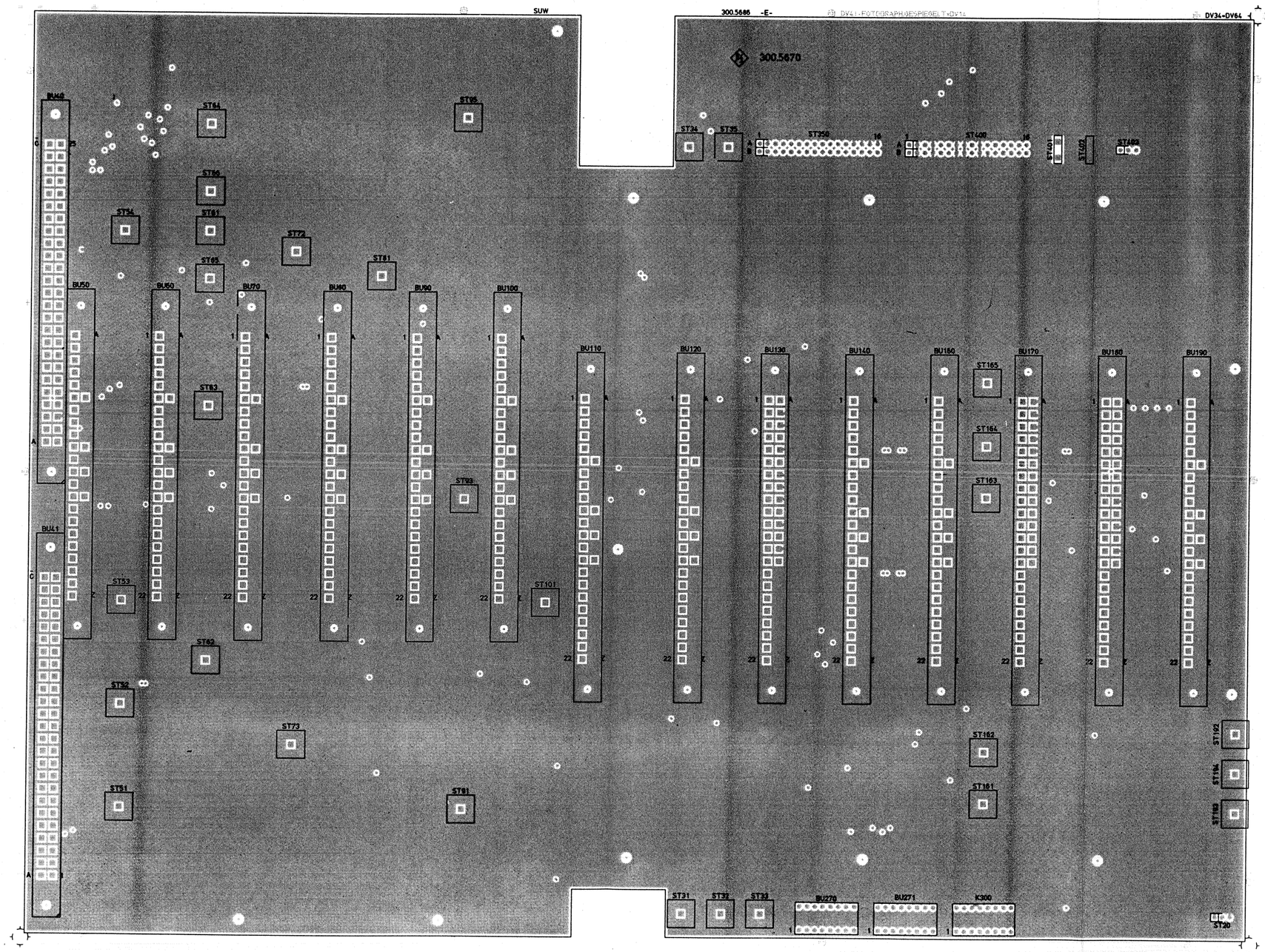

DV 41

1 2 3

VARIANTENERKLÄRUNG/VERSION
VAR 02 – GRUNDAUSFÜHRUNG/BASIC MODEL

ACHTUNG EGB
Elektrostatisch gefährdete Bauelemente erfordern eine besondere Handhabung
ATTENTION ESD
Electrostatic sensitive devices require a special handling

F 32942 03.86 LS	Maße ohne Toleranzangabe	Maßstab 1 : 1 Halbzeug Werkstoff	
	1KGA Tag Name Bearb 03.86 LS Gepr Norm	Benennung Motherboard	Z
Änd Zust Änderungs Mitteilung Tag Name	ROHDE & SCHWARZ zu Gerät SMPC	Zeichn Nr 300.5670.01 ED reg 300.1000 V erste Z 300.1468	Blatt Nr 2 v Bl

Erich Feucht München 07 6001 8

Ansicht und Leitungsführung Lötseite
View of tracks on solder side

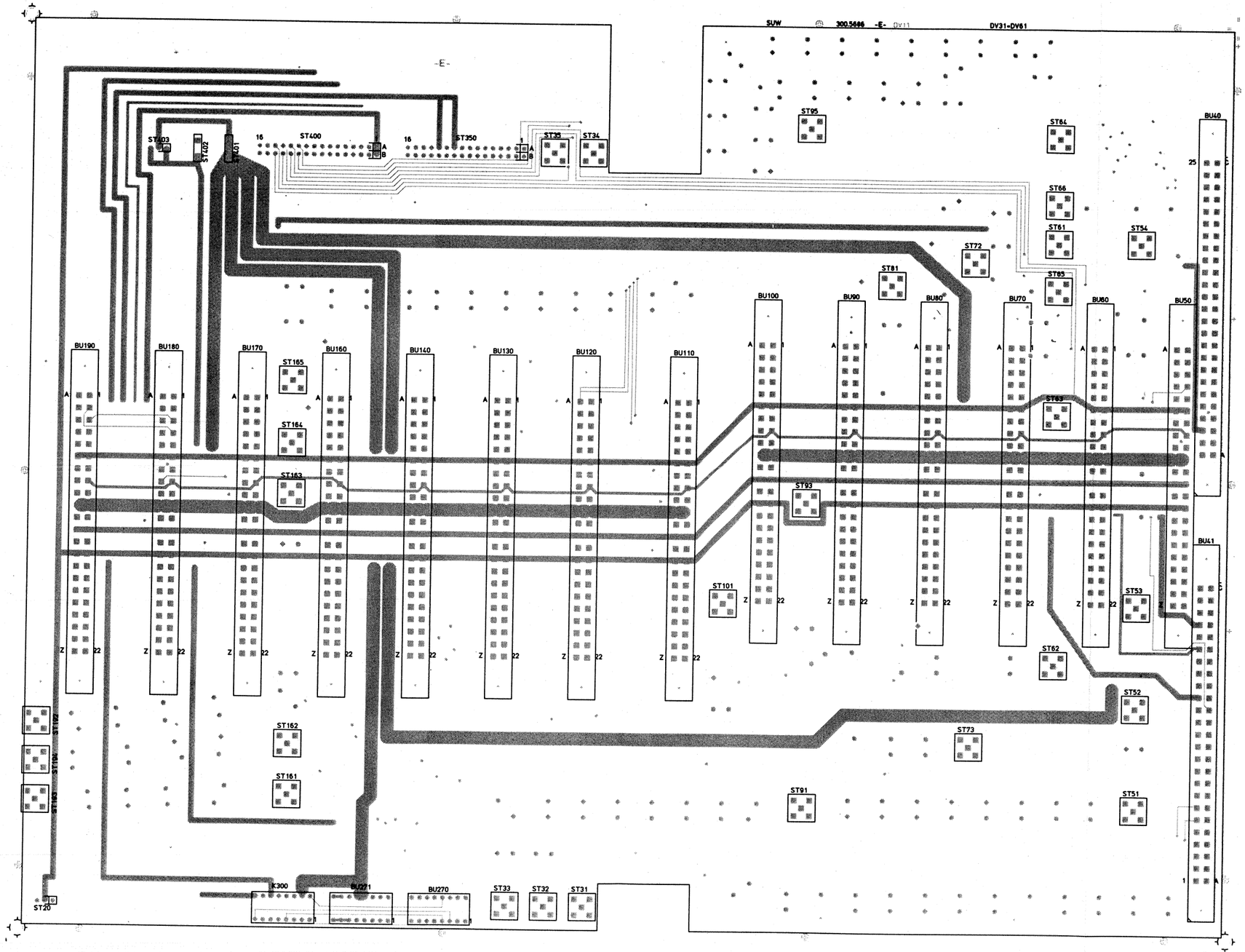

DV 11

1 2 3

VARIANTENERKLÄRUNG/VERSION
VAR 02 – GRUNDAUSFÜHRUNG/BASIC MODEL

Für diese Unterlage behalten wir uns alle Rechte vor

ISO-Projektion Methode E

ACHTUNG: EGB!
Elektrostatisch gefährdete Bauelemente erfordern eine besondere Handhabung
ATTENTION ESD!
Electrostatic sensitive devices require a special handling

F 32942	03.86	LS	Maße ohne Toleranzangabe			Maßstab 1 : 1	
						Halbzeug, Werkstoff	
			1KGA	Tag	Name	Benennung	
			Bearb	03.86	LS	Motherboard	Z
			Gepr				
			Norm				
			ROHDE & SCHWARZ			Zeichn.-Nr 300.5670.01 ED	Blatt-Nr 7
And Zust	Änderungs-Mitteilung	Tag Name	zu Gerät SMPC			reg i V 300.1000 V erste Z 300.1468	v Bl

PF 095 2487 0781

Erich Feucht, München 07 6001 8

ROHDE&SCHWARZ

SERVICE INSTRUCTIONS

SMPC Processor

356.1405 (Y1)

Printed in West Germany

Table of Contents

		Page
5	Service Instructions for SMPC Processor 356.1405 (Y1)	5.1
5.1	Circuit Description	5.1
5.1.1	CPU and Program Memory	5.1
5.1.2	Data Memory and Input Ports	5.1
5.1.3	Address Decoding	5.2
5.1.4	Data Busses	5.4
5.1.4.1	Internal Data Bus	5.4
5.1.4.2	Front-panel Data Bus	5.4
5.1.4.3	Subassemblies Data Bus	5.4
5.1.5	IEC Bus	5.4
5.1.6	Signature Analysis	5.5
5.2	Checking	5.5
5.2.1	Adjustment of the Analog Output	5.5
5.2.2	Checking the Interface Functions	5.5
5.3	Troubleshooting	5.6
5.3.1	Address Analysis	5.6
5.3.2	Program Memory Analysis	5.8
5.3.3	Test Program Analysis	5.8
5.3.3.1	RAM Test	5.8
5.3.3.2	Reading-in the IEC-bus Address	5.8
5.3.3.3	Checking the Signatures of SMPC Processor Y1	5.9
5.3.3.4	Checking the Signature Paths to the Subassemblies	5.12

Parts list
Circuit diagram
Components location plans

5 Service Instructions for SMPC Processor 356.1405 (Y1)

5.1 Circuit Description

(See circuit diagram 356.1405 S and Fig. 5-1)

Y1 is the central controller of the unit. It consists of the following functional groups:

- CPU and program memory
- data memory and input ports
- address decoding
- data bus
- D/A converter
- IEC bus
- signature analysis

5.1.1 CPU and Program Memory

An 8085 A (B1) microprocessor is used as CPU. It contains an oscillator for generating the clock frequency. The frequency of the oscillator is determined by a 6-MHz crystal, giving rise to the machine clock period of 333 ns. The microprocessor is provided with interrupt logic for four different interrupts. The only static interrupt request inputs used are RST 5.5 (for the keyboard and IEC bus), RST 6.5 (for the tuning sequencer) and RST 7.5 (for the microcomputer in Oscillator Control Y10).

The SMPC Processor has a program memory of 28 kbytes in five 4-kbyte EPROMs 2732 (B10 to B14) and one 8-kbyte EPROM Type 2764 (B15).

5.1.2 Data Memory and Input Ports

A 1-kbyte RAM (B8 and B9) is used as a variable memory. It is backed-up by two nickel-cadmium batteries which enable the data to be stored in the memory for about six weeks after the unit has been switched off. To prevent the microprocessor from writing into the RAM at switch-off and switch-on, a protection circuit (B23) ensures that the RAM is inhibited whenever the micro-processor is in an undefined state.

The IEC-bus addresses are read by B38 and the alarm signals from the subassemblies by B36 and B37.

5.1.3 Address Decoding

The microprocessor B1 uses a multiplexed data and address bus AD0 to AD7. The control signal ALE (address latch enable) separates the addresses from the data and stores them in address latch B18.

The memory select signals ($\overline{CE}$) for the EPROMs are obtained from address bits A_{12} to A_{14} by the decoder B5 (when A_{15} L). The decoder B6 controls the strobe output to the subassemblies (B39 to B42), for access to the RAMs (B8 and B9), to the front panel, to the subassemblies' data bus (input and output) and to the IEC bus (B50).

To speed up the processing time, memory mapped I/O has been chosen. All chips are addressed by memory address instructions. Instead of the accumulator being the only transfer register in the CPU, it is possible to transfer data with any chosen internal register. Practically all memory address instructions may also be used for I/O.

Table 5-1

Address (HEX)	Assignment
0 - FFF	1st EPROM 2732 (B10)
1000 - 1FFF	2nd EPROM 2732 (B11)
2000 - 2FFF	3rd EPROM 2732 (B12)
3000 - 3FFF	4th EPROM 2732 (B13)
4000 - 4FFF	5th EPROM 2732 (B14)
5000 - 6FFF	6th EPROM 2764 (B15)
9000	Strobe 1 to FM Stage
9001	Strobe 1 to AF Generator
9002	Strobe 2 to AF Generator
9003	Strobe 3 to AF Generator
9004	Strobe 4 to AF Generator
9005	Strobe 5 to AF Generator
9006	Strobe 6 to AF Generator
9007	Strobe 1 to Interpolation Synthesizer I
9008	Strobe 2 to Interpolation Synthesizer I
9009	Strobe 3 to Interpolation Synthesizer I
900A	Strobe 4 to Interpolation Synthesizer I
900B	Strobe to Interpolation Synthesizer II
900C	Strobe to RF-off latch
900D	Strobe 1 to Interpolation Synthesizer III
900E	Strobe 2 to Interpolation Synthesizer III
900F	Strobe to SMPC Buffer
9010	Strobe 2 to FM Stage
9011	Strobe to Oscillator Control
9012	Strobe to Output Oscillator I
9013	Strobe to Output Oscillator II
9014	Strobe 3 to FM Stage
9015	Strobe 1 to Amplitude Modulator + ALC
9016	Strobe 2 to Amplitude Modulator + ALC
9017	Strobe to Output Stage II
9018	Strobe 4 to FM Stage
9019	Strobe 5 to FM Stage
901A	Strobe to mechanical attenuator
901B	Address 1 of D/A converter (bit 1 to bit 8)
901C	Address 2 of D/A converter (bit 9 to bit 12)
901D	Address of subassemblies data-bus output
AOOO - A3FF	Battery backed-up RAMs (B8, B9)
BOOO	Address 1 of front panel
BOO1	Command 1 of front panel
COOO	Address 2 of front panel
COO1	Command 2 of front panel
DOOO	Address 3 of front panel
DOO1	Command 3 of front panel
EOOO	Address of IEC-bus address input
EOO1	Address 1 to read in alarm signals
E002	Address 2 to read in alarm signals
E003	Address of subassemblies data-bus input
FOOO	Address of IEC-bus chip (B50)

5.1.4 Data Busses

The SMPC Processor can transfer data via three data busses. It gains access to these by tri-state drivers. The **internal data bus** is controlled by B34, the **front-panel data bus** by B44 and the **subassemblies data bus** by B3 (data-bus output) and B35 (data-bus input).

5.1.4.1 Internal Data Bus

The internal data bus connects the CPU to the memories, the IEC-bus chip, the D/A converters and, via the interfaces, to the other busses. It is always active.

5.1.4.2 Front-panel Data Bus

The front-panel data bus is connected to the front panel by a ribbon cable. It is only active when data is actually transferred. Interferences from the ribbon cable are thus avoided.

5.1.4.3 Subassemblies Data Bus

The subassemblies data bus provides multiplexed data transfer for the subassemblies Y2 to Y15 and Y30. Each subassembly stores the data present on the bus when it receives its strobe.

5.1.5 IEC Bus

The IEC bus allows the implementation of the following interface functions according to DIN IEC-625:

T6 Basic Talker, Serial Poll, Unaddress if MLA
L4 Basic Listener, Unaddress if MTA
SR1 Service Request Function Complete capability
RL1 Remote Local Function Complete capability
DC1 Device Clear Function Complete capability

The IEC-bus interface chip B50 (8291) performs the IEC-bus functions directly, using hardware. The information of the listener address A1 to A5 and the RTL (Return to Local) and SR (Service Request) signals are written into the chip by the internal data bus. The chip contains all the registers that are required.

5.1.6 Signature Analysis

The SMPC Processor can be tested by means of signature analysis. For this purpose, the test adapter ST1 is provided. The analysis is switched on by means of switch S1. The addresses, program memories and peripherals are tested by the analysis. For testing the addresses and program memory, the data bus to the memory is interrupted by B33 (74 LS 245). Whenever an instruction is called up, ØØH is applied by B4 via the data bus to the microprocessor. This means the microprocessor is not to execute an instruction and only the program counter is incremented. Thus the microprocessor periodically scans the entire address range. After the separation of data bus by B33, the memory data are periodically output. The SMPC Processor can now be checked by means of the signature analyzer.

5.2 Checking

5.2.1 Adjustment of the Analog Output

Set sweep e.g.

upper limit:	200 MHz
lower limit:	100 MHz
step size:	5 kHz

The voltage deviation measured at the analog output ST40.U is to be 5 ±0.1 V between the upper and lower limit frequencies of the sweep.

5.2.2 Checking the Interface Functions

Connect a controller to the SMPC. Enter all setting instructions listed in section 2.4.2 and check for the proper execution of the instructions on the front panel display.

5.3 Troubleshooting

Test equipment required:

Signature analyzer
Test EPROM from R&S
Order No. 337.9904
(included in the Service Kit XPC-Z1)

The check comprises three different signature analyses that are carried out in the following order:

1. Address analysis
2. Program memory analysis
3. Test program analysis

Links S1 and S2 (below B4) serve for carrying out the different analyses. (S1 and S2 are shown in normal position).

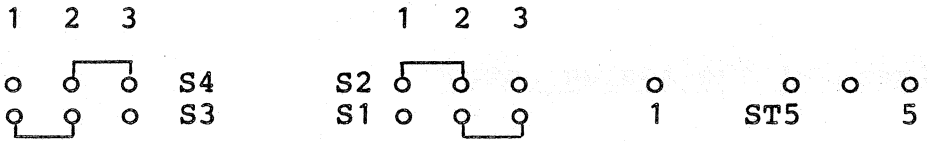

5.3.1 Address Analysis

Setup on Y1:

- Set link S1 to contacts 1-2.
- Set link S2 to contacts 3-2.
- Plug the START, STOP, CLOCK and GND lines of the signature analyzer onto the four adjacent test pins 5, 4, 3, 1 of ST5.
- Setting on the signature analyzer:
  START EDGE: ↑, STOP EDGE: ↓, CLOCK EDGE: ↓
- Switch on the SMPC

Now all address lines can be checked by means of the signature analyzer. All relevant signatures are given in Table 5-2. If all address lines supply the correct signatures, the program memory analysis can be carried out.

Table 5-2

Chip		Signature
B1	PIN	
	12 (AD_0)	H335
	13 (AD_1)	C113
	14 (AD_2)	7050
	15 (AD_3)	0772
	16 (AD_4)	C4C3
	17 (AD_5)	AA08
	18 (AD_6)	7211
	19 (AD_7)	A3C1
	21 (A_8)	7707
	22 (A_9)	577A
	23 (A_{10})	HH86
	24 (A_{11})	89F1
	25 (A_{12})	AC99
	26 (A_{13})	PCF3
	27 (A_{14})	1180

Chip		Signature
B10 to B15	PIN	
	8 (A_0)	H335
	7 (A_1)	C113
	6 (A_2)	7050
	5 (A_3)	0772
	4 (A_4)	C4C3
	3 (A_5)	AA08
	2 (A_6)	7211
	1 (A_7)	A3C1
	23 (A_8)	7707
	22 (A_9)	577A
	19 (A_{10})	HH86
	21 (A_{11})	89F1

Chip		Signature
B15	10 (A_0)	H335
	9 (A_1)	C113
	8 (A_2)	7050
	7 (A_3)	0772
	6 (A_4)	C4C3
	5 (A_5)	AA08
	4 (A_6)	7211
	3 (A_7)	A3C1
	25 (A_8)	7707
	24 (A_9)	577A
	21 (A_{10})	HH86
	23 (A_{11})	89F1
	2 (A_{12})	AC99

For units with an EPROM of Type 2732 for B15 the same signatures as for B10 to B14 apply.

5.3.2 Program Memory Analysis

Setup on Y1:

- Same as for address analysis but set link S2 to contacts 1-2 (S1 remains on contacts 1-2).
- Setting on the signature analyzer:
  START EDGE:↓, STOP EDGE:↑ , CLOCK EDGE:↑.
- Furthermore, remove RAMs (B8 and B9).

After the SMPC has been switched on, the signatures are checked on the internal data bus. The signatures are dependent on the software version (see appendix: Table 5-3). If the address lines and program memories are ok, start the test program to check all the remaining chips.

5.3.3 Test Program Analysis

Setup on Y1:

- Replace the unplugged chips B8 and B9.
- Unplug B10 and insert service EPROM in its place.
- Set link S1 to contacts 3-2 (S2 remains on contacts 1-2).
- Setting on the signature analyzer:
  START EDGE:↑, STOP EDGE:↓ , CLOCK EDGE: ↑.
- Connect the START and STOP lines to B50 pin 8, the GND line is left at the test pin ST1. Connect the CLOCK line to B81 pin 6.

5.3.3.1 RAM Test

After switching on, the microprocessor tests both RAMs B8 and B9.

The display indicates:

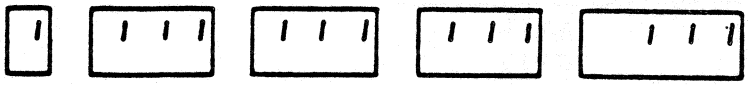

If B8 and B9 are ok, further checking with the test EPROM is possible. The display will now indicate the selected IEC-bus address. If one or both of the RAMs are faulty, any subsequent keyed instruction will not be carried out (in any case, the IEC-bus address will not be indicated). This means that the RAMs must be exchanged.

5.3.3.2 Reading-in the IEC-bus Address

On each occasion that RCL is keyed, the IEC-bus address is again read-in and redisplayed.

5.3.3.3 Checking the Signatures on Y1

- Press key RF MHz.

The relevant signatures are given in Table 5-4.

Table 5-4

Chip				Signature
B1	PIN	B34	PIN	
	12		11	87C5
	13		12	A7HH
	14		13	59F3
	15		14	2UA8
	16		15	06HC
	17		16	1441
	18		17	26C8
	19		18	CC9H
	24			0000
	25			72U5
	26			71CC
	27			3563
B2	PIN	B3	PIN	
	2		18	P4AA
	5		16	807F
	6		14	7P08
	9		12	OH2F
	12		9	2C90
	15		7	4CP4
	16		5	6538
	19		3	H36A
		B20	PIN	
			2	PU3U
			5	403P
			6	3U04
			9	0696
			12	15F8
			15	25U2
			16	329F
			19	69C5

Chip		Signature
B18	PIN	
	2	4496
	5	6P06
	6	852C
	9	34PU
	12	34H2
	15	A653
	16	0000
	19	0000
B6	PIN	
	10	5U5A
	11	6A39
	12	7U3C
	13	OP80
	14	44H8
B44	PIN	
	2	5200
	3	38FO
	4	UH26
	5	53H2
	6	2H15
	7	C2H1
	8	6C2H
	9	2U3U
B82	PIN	
	11	4A58
B32	PIN	
	2	5294
	10	5294
	11	44H8
	12	6U55

Chip		Signature
B39	PIN	
	10	F383
	11	P33U
	12	UFAC
	13	AHAA
	14	6A8C
	15	8PA7

B40	PIN	
	7	OC3A
	9	C89U
	10	FF3H
	11	5878
	12	HOH7
	13	F536
	14	7919
	15	UFUU

B41	PIN	
	7	4023
	9	HCC7
	10	A92U
	11	UA2C
	12	9AC6
	13	8915
	14	UH62
	15	739P

B42	PIN	
	7	AF02
	9	5U98
	10	2FHP
	11	4413
	12	5HCO
	13	69H2
	14	P582
	15	6U9A

5.3.3.4 Checking the Signature Paths to the Subassemblies

The signatures of the subassembly data bus (B35, Table 5-5) apply for all subassemblies connected and can be traced to the respective input latches.

Table 5-5

Data bus	Signature
DØ	P4AA
D1	807F
D2	7P08
D3	0H2F
D4	2C90
D5	4CP4
D6	6538
D7	H36A

The signatures of the strobe lines and of the front-panel data bus can be traced to the subassembly by means of Table 5-6.

Table 5-6

Chip on Y1	Pin	Subassembly		Strobe/ bit	Chip	Pin	Signature
B42	15	Y2	FM	1	B20	11	6U9A
B40	15			2	B21	11	UFUU
	11			3	B22	11	5878
B42	14	Y3	AF	1	B 4	11	P582
	13			2	B 5	11	69H2
	12			3	B53	2	5HC0
	11			4	B51	11	4413
	10			5	B50	11	2FHP
	9			6	B 6	11	5U98
B42	7	Y4	INT I	1	B21	11	AF02
B41	15			2	B17	11	739P
	14			3	B13	11	UH62
	13			4	B 9	11	8915
B41	10	Y6	INT III	1	B501	9	A92U
	9			2	B502	9	HCC7
B41	7	Y7	Buffer	1	B 2	9	4023
B40	12	Y9	OO II	1	B20	11	H0H7
B32	12	Y10	OO III	1	B45	11	6U55
B40	10	Y12	AM	1	B 2	11	FF3H
	9			2	B 1	9	C89U
B40	7	Y14	OS II	1	B 1	9	0C3A
B39	13	Y30	ATT	1	B 1	11	AHAA
B41	11			2	B 5	3	UA2C
B44	2	Y19	Front	DØ	B1/20/50	12	5200
	3		panel	D1		13	38F0
	4			D2		14	UH26
	5			D3		15	53H2
	6			D4		16	2H15
	7			D5		17	C2H1
	8			D6		18	6C2H
	9			D7		19	2U3U
B39	1			C/D		21	449C
B 6	12			$\overline{CS}$ I	B 1	22	7U3C
	11			$\overline{CS}$ II	B20	22	6A39
	10			$\overline{CS}$ III	B50	22	5U5A

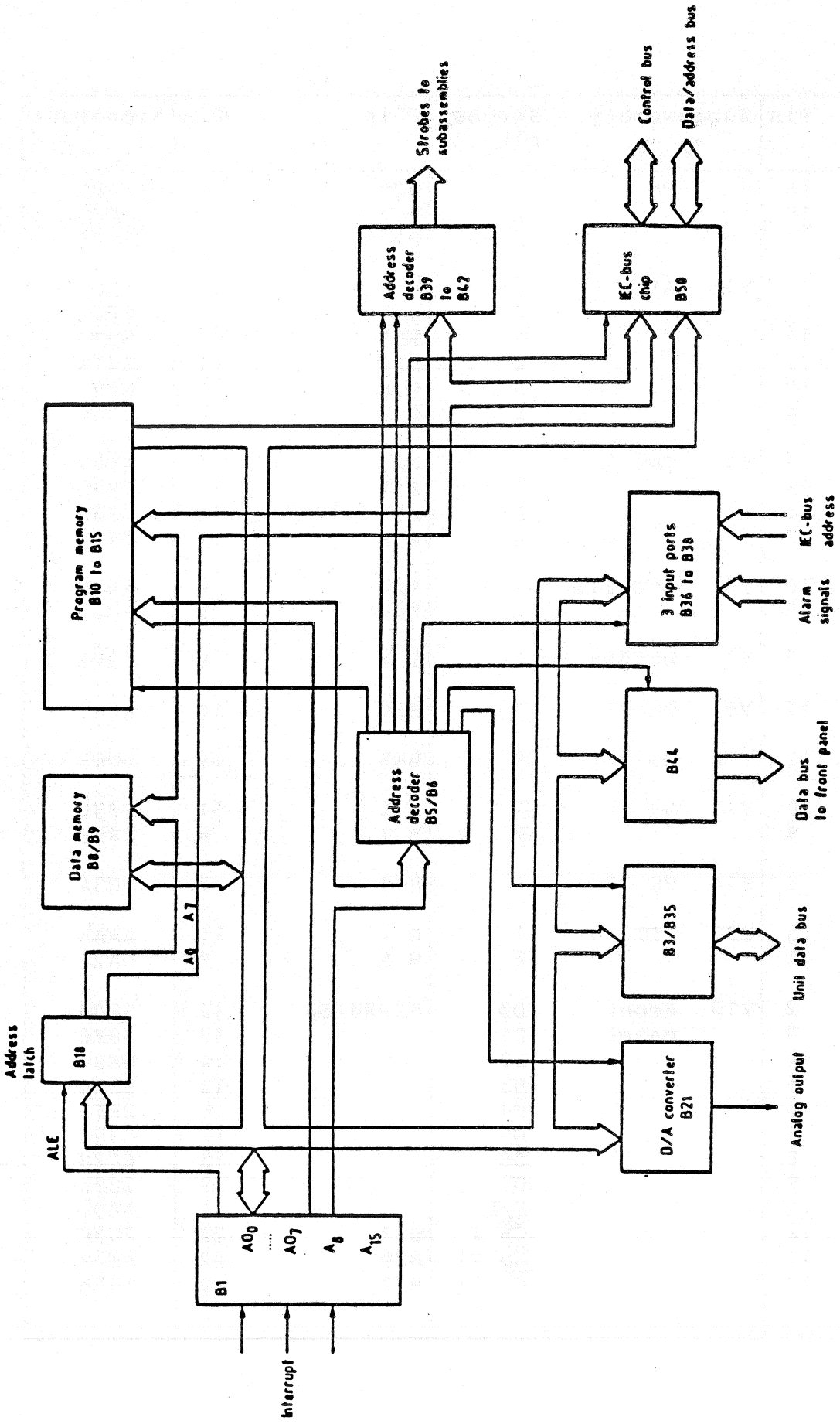

Fig. 5-1 Block diagramm of Processor Y1

Signaturen SMPC Y1
Signatures SMPC Y1

Tabelle 5-3
Table 5-3

B34 PIN	Bus	EPROM Satz EPROM Set 300.9830-2-	300.9830-3-	356.1311
9	DØ	CFC6	94A1	1184
8	D1	6C89	14HF	3FAP
7	D2	66A2	C2H2	60H6
6	D3	9HH0	2A30	35FP
5	D4	UP6P	PH45	AHF6
4	D5	C7C8	48CH	9086
3	D6	6441	A727	P4C4
2	D7	F9FC	F296	2UAH

B34 PIN	Bus	EPROM Satz EPROM Set 356.1311-1-	356.1434
9	DØ	HPUC	36H3
8	D1	4380	F5U0
7	D2	92H0	60P7
6	D3	H5UF	2C80
5	D4	H7H6	UP21
4	D5	978P	UAH4
3	D6	62A6	57HF
2	D7	165C	P6HF

ROHDE & SCHWARZ
MÜNCHEN

Schaltteillisten
Stromläufe
Bestückungspläne

Parts lists
Circuit diagrams
Components plans

R 29500 Bl. 2

Kennzeichen Component No.	Benennung/Beschreibung Designation	Sachnummer Stock No.	enthalten in contained in
B1	BC P8085A 8B.CPU CPU INTEL P8085A	BC 335.8930	
B2	BL SN74LS273N 8BIT-D-REG. 8BIT-D-REGISTER TEXAS SN74LS273N	BL 214.8998	
B3	BL SN74LS244N 8XBUS-TREIB IC 8XBUS DRIVER TEXAS SN74LS244N	BL 092.8984	
B4	BL SN74LS244N 8XBUS-TREIB IC 8XBUS DRIVER TEXAS SN74LS244N	BL 092.8984	
B5	BL SN74LS138N DEMUX 1:8 DEMULTIPLEXER 1:8 TEXAS SN74LS138N	BL 510.1379	
B6	BL SN74LS138N DEMUX 1:8 DEMULTIPLEXER 1:8 TEXAS SN74LS138N	BL 510.1379	
B7	BL SN74LS74AN 2/D-FLIPFL. IC FLIP-FLOP SN74LS74N TEXAS SN74LS74N	BL 266.7934	
B8	BC TC5514P 1KX4B. RAM RAM TOSHIBA TC5514P	BC 344.1411	
B9	BC TC5514P 1KX4B. RAM RAM TOSHIBA TC5514P	BC 344.1411	
B18	BL SN74LS373N 8BIT-D-REG. BL SN74LS373N 8BIT-D-REG. TEXAS SN74LS373N	BL 336.7543	
B19	BL SN74LS175N 4/D-FLIPFLO IC FLIP FLOP SN74LS175N TEXAS SN74LS175N	BL 291.5048	
B20	BL SN74LS273N 8BIT-D-REG. 8BIT-D-REGISTER TEXAS SN74LS273N	BL 214.8998	
B21	BJ AD7531KD 12B.D/A-CONV D/A-CONVERTER ANALOG-DEV AD7531KD	BJ 300.9369	
B22	BO CA3240AE BIMOS DUAL OP IC OPERATION AMPLIFIER RCA CA3240AE	BO 302.7040	
B23	BO TCA965 FENSTER-DISKRIM IC DISCRIMINATOR TCA965 SIEMENS TCA965	BO 279.2213	
B31	BL SN74LS04N 6/INVERTER HEXINVERTER TEXAS SN74LS04N	BL 266.2010	
B32	BL SN74LS04N 6/INVERTER HEXINVERTER TEXAS SN74LS04N	BL 266.2010	
B33	BL SN74LS245N 8XBUS-TRSCV IC 8XBUS TRSCV SN74LS245N TEXAS SN74LS245N	BL 300.8833	

Für diese Unterlage behalten wir uns alle Rechte vor

Kennzeichen Component No.	Benennung/Beschreibung Designation	Sachnummer Stock No.	enthalten in contained in
B34	BL SN74LS245N 8XBUS-TRSCV IC 8XBUS TRSCV SN74LS245N TEXAS SN74LS245N	BL 300.8833	
B35	BL SN74LS244N 8XBUS-TREIB IC 8XBUS DRIVER TEXAS SN74LS244N	BL 092.8984	
B36	BL SN74LS367N 6/TREIBER IC DRIVER SN74LS367N TEXAS SN74LS367AN	BL 510.1362	
B37	BL SN74LS244N 8XBUS-TREIB IC 8XBUS DRIVER TEXAS SN74LS244N	BL 092.8984	
B38	BL SN74LS367N 6/TREIBER IC DRIVER SN74LS367N TEXAS SN74LS367AN	BL 510.1362	
B39	BL SN74LS138N DEMUX 1:8 DEMULTIPLEXER 1:8 TEXAS SN74LS138N	BL 510.1379	
B40	BL SN74LS138N DEMUX 1:8 DEMULTIPLEXER 1:8 TEXAS SN74LS138N	BL 510.1379	
B41	BL SN74LS138N DEMUX 1:8 DEMULTIPLEXER 1:8 TEXAS SN74LS138N	BL 510.1379	
B42	BL SN74LS138N DEMUX 1:8 DEMULTIPLEXER 1:8 TEXAS SN74LS138N	BL 510.1379	
B43	BL SN74LS138N DEMUX 1:8 DEMULTIPLEXER 1:8 TEXAS SN74LS138N	BL 510.1379	
B44	BL SN74LS245N 8XBUS-TRSCV IC 8XBUS TRSCV SN74LS245N TEXAS SN74LS245N	BL 300.8833	
B50	BC P8291A IEC BUS INTERF IEC BUS INTERFACE INTEL P2891A	BC 099.4978	
B51	BJ MC3448AP 4XBUS-TRANSC BUS-TRANSCEIVER MOTOROLA MC3448AP	BJ 300.6247	
B52	BJ MC3448AP 4XBUS-TRANSC BUS-TRANSCEIVER MOTOROLA MC3448AP	BJ 300.6247	
B53	BJ MC3448AP 4XBUS-TRANSC BUS-TRANSCEIVER MOTOROLA MC3448AP	BJ 300.6247	
B54	BJ MC3448AP 4XBUS-TRANSC BUS-TRANSCEIVER MOTOROLA MC3448AP	BJ 300.6247	
B81	BL SN74LS32N 4/2INP.OR IC OR GATE SN74LS32N TEXAS SN74LS32N	BL 266.4687	
B82	BL SN74LS08N 4/2INP.AND IC AND GATE SN74LS08N TEXAS SN74LS08N	BL 266.4664	
B83	BL SN74LS32N 4/2INP.OR IC OR GATE SN74LS32N TEXAS SN74LS32N	BL 266.4687	

Kennzeichen Component No.	Benennung/Beschreibung Designation	Sachnummer Stock No.	enthalten in contained in
B84	BL SN74LS26N 4/2INP.NAND IC SN74LS26N 4/2INP.NAND TEXAS SN74LS26N	BL 280.7567	
BA1	EB 1,2U 20MAH NI-CA AKKU BATTERY VARTA BEST.NR.53002101000	300.9430	
BA2	EB 1,2U 20MAH NI-CA AKKU BATTERY VARTA BEST.NR.53002101000	300.9430	
BU43	FR JC-FASSUNG 16 POLIG 16-PIN IC-SOCKET PRECICONT USO16T	FR 249.6091	
B10/02	BC 2732 PROGR.B10 ENTHALTEN IN PROM-SATZ INCLUDED IN SET OF PROM 356.1434	356.1440	
B10/04	BC 2764 PROGR.B10 ENTHALTEN IN PROM-SATZ INCLUDED IN SET OF PROM 377.0114	377.0120	
B10/54	BC 2732 PROGR.B10 ENTHALTEN IN PROM-SATZ INCLUDED IN SET OF PROM 356.1534	356.1540	
B11/02	BC 2732 PROGR.B11 ENTHALTEN IN PROM-SATZ INCLUDED IN SET OF PROM 356.1434	356.1457	
B11/04	BC 2764 PROGR.B11 ENTHALTEN IN PROM-SATZ INCLUDED IN SET OF PROM 377.0114	377.0137	
B11/54	BC 2732 PROGR.B11 ENTHALTEN IN PROM-SATZ INCLUDED IN SET OF PROM 356.1534	356.1557	
B12/02	BC 2732 PROGR.B12 ENTHALTEN IN PROM-SATZ INCLUDED IN SET OF PROM 356.1434	356.1463	
B12/04	BC 2764 PROGR.B12 ENTHALTEN IN PROM-SATZ INCLUDED IN SET OF PROM 377.0114	377.0143	
B12/54	BC 2732 PROGR.B12 ENTHALTEN IN PROM-SATZ INCLUDED IN SET OF PROM 356.1534	356.1563	
B13/02	BC 2732 PROGR.B13 ENTHALTEN IN PROM-SATZ INCLUDED IN SET OF PROM 356.1434	356.1470	
B13/04	BC 2764 PROGR.B13 ENTHALTEN IN PROM-SATZ INCLUDED IN SET OF PROM	377.0150	

Für diese Unterlage behalten wir uns alle Rechte vor

Kennzeichen Component No.	Benennung/Beschreibung Designation	Sachnummer Stock No.	enthalten in contained in
	377.0114		
B13/54	BC 2732 PROGR.B13 ENTHALTEN IN PROM-SATZ INCLUDED IN SET OF PROM 356.1534	356.1570	
B14/02	BC 2732 PROGR.B14 ENTHALTEN IN PROM-SATZ INCLUDED IN SET OF PROM 356.1434	356.1486	
B14/04	BC 2764 PROGR.B14 ENTHALTEN IN PROM-SATZ INCLUDED IN SET OF PROM 344.0114	377.0166	
B14/54	BC 2732 PROGR.B14 ENTHALTEN IN PROM-SATZ INCLUDED IN SET OF PROM 356.1534	356.1586	
B15/02	BC 2764 PROGR.B15 ENTHALTEN IN PROM-SATZ INCLUDED IN SET OF PROM 356.1434	356.1492	
B15/04	BC 2764 PROGR.B15 ENTHALTEN IN PROM-SATZ INCLUDED IN SET OF PROM 377.0114	377.0172	
B15/54	BC 2764 PROGR.B15 ENTHALTEN IN PROM-SATZ INCLUDED IN SET OF PROM 356.1534	356.1592	
C1	CC 10NF-20+50%7X8R6000 CAPACITOR VALVO 2222 63051 64051103	CC 087.7525	
C2	CE 1,0UF+-20%35V 5X 4X 7 ELECTROLYTIC CAPACITOR ERO-TANTAL TA-ELKOETR1-1/35	CE 022.8185	
C3	CC 10NF-20+50%7X8R6000 CAPACITOR VALVO 2222 63051 64051103	CC 087.7525	
C4	CC 10NF-20+50%7X8R6000 CAPACITOR VALVO 2222 63051 64051103	CC 087.7525	
C5	CC 10NF-20+50%7X8R6000 CAPACITOR VALVO 2222 63051 64051103	CC 087.7525	
C6	CC 6,8PF+-0,25PF4X5P100 CAPACITOR VALVO 2222 678 03688	CC 087.6270	
C7	CC 220PF+-10%63V3X5D2000 CAPACITOR VALVO 2222 63051 221	CC 099.5616	
C10	CE 100UF-10+50%40V 10X20 ELECTROLYTIC CAPACITOR ROEDERST - EBS 100/40 10X20	CE 092.6175	
C11	CE 4,7UF+-20%10V 5X 4X 7 ELECTROLYTIC CAPACITOR ERO-TANTAL TA-ELKOETR1,4,7/10	CE 022.8056	

Kennzeichen Component No.	Benennung/Beschreibung Designation	Sachnummer Stock No.	enthalten in contained in
C12	CE 10 UF+-20%16V 7X 4X 8 ELECTROLYTIC CAPACITOR ERO-TANTAL TA-ELKOETR2-10/15	CE 022.8085	
C15	CE 100UF-20+50%16V 8,5X20 ELECTROLYTIC CAPACITOR ROEDERST ELKOEBS100/16	CE 022.7737	
C16	CE 100UF-20+50%16V 8,5X20 ELECTROLYTIC CAPACITOR ROEDERST ELKOEBS100/16	CE 022.7737	
C17	CE 100UF-20+50%16V 8,5X20 ELECTROLYTIC CAPACITOR ROEDERST ELKOEBS100/16	CE 022.7737	
C20	CC 3,3NF+-10%6X7R2000 CAPACITOR VALVO 2222 63051 332	CC 087.7083	
C21	CC 1,2NF+-10%4X5R2000 CAPACITOR VALVO 2222 63051 122	CC 087.7031	
C22	CC 1,2NF+-10%4X5R2000 CAPACITOR VALVO 2222 63051 122	CC 087.7031	
C25	CC 100NF+-10%50V5K1200VIE CAPACITOR AEROVOX CKR05BX104KL	CC 084.5350	
BIS/TO C34			
GL1	AD 1N4448 75V 0,15A UDI DIODE VALVO 1N4448	AD 012.0700	
GL2	AD 1N4448 75V 0,15A UDI DIODE VALVO 1N4448	AD 012.0700	
GL3	AD 1N4448 75V 0,15A UDI DIODE VALVO 1N4448	AD 012.0700	
GL4	AE BZX55/B5V1 0,5W Z-DI ZENER DIODE VALVO BZX55/B5V1	AE 262.5837	
GL5	AF HLMP1503 LED GN RD3 LED HEWLETT-P. HLMP1503	AF 252.5570	
GL6	AE 5082-2800 SCHOTTKYDI DIODE HEWLETT-P. 5082-2800	AE 012.9066	
GL7	AE 5082-2800 SCHOTTKYDI DIODE HEWLETT-P. 5082-2800	AE 012.9066	
MP1	VL WIRE-WRAP PIN BERG NR. 75 403-001	VL 088.4507	
Q1	EQ 6,000 MHZ CL30PF HC43U CRYSTAL 6,000MHZ	EQ 302.7186	
R1	RL 0,35W 475 OHM+-1%TK50 RESISTOR DRALORIC SMA0207/4750HM-F-D	RL 083.0390	

Für diese Unterlage behalten wir uns alle Rechte vor

Kennzeichen Component No.	Benennung/Beschreibung Designation	Sachnummer Stock No.	enthalten in contained in
R2	RL 0,35W9.88KOHM+-0,1%T25 RESISTOR DRALORIC 0207 9,88KOHM 0,1%	RL 084.3058	
R3	RL 0,35W24,6KOHM+-0,1%T25 RESISTOR DRALORIC 0207 24,6KOHM 0,1%	RL 084.3812	
R4	RL 0,35W 3,32KOHM+-1%TK50 RESISTOR DRALORIC SMA0207/3,32K-F-D	RL 083.0990	
R5	RL 0,35W 3,32KOHM+-1%TK50 RESISTOR DRALORIC SMA0207/3,32K-F-D	RL 083.0990	
R6	RL 0,35W 4,75KOHM+-1%TK50 RESISTOR DRALORIC SMA0207/4,75K-F-D	RL 083.1097	
R7	RL 0,35W 1KOHM+-1%TK50 RESISTOR DRALORIC SMA0207/1K-F-C	RL 082.2160	
R8	RL 0,35W 3,32KOHM+-1%TK50 RESISTOR DRALORIC SMA0207/3,32K-F-D	RL 083.0990	
R9	RL 0,35W 4,75KOHM+-1%TK50 RESISTOR DRALORIC SMA0207/4,75K-F-D	RL 083.1097	
R10	RL 0,35W 2,21KOHM+-1%TK50 RESISTOR DRALORIC SMA 0207/2,21K-F-C	RL 082.2477	
R11	RL 0,35W 1MOHM+-1%TK50 RESISTOR DRALORIC SMA0207/1M-F-D	RL 082.7862	
R12	RL 0,35W 10,0KOHM+-1%TK50 RESISTOR DRALORIC SMA0207/10K-F-D	RL 083.1297	
R13	RL 0,35W 24,3KOHM+-1%TK50 RESISTOR DRALORIC SMA/207/24,3K-F-C	RL 083.1574	
R14	RL 0,35W 3,01KOHM+-1%TK50 RESISTOR DRALORIC SMA0207/3,01K-F-D	RL 083.0961	
R15	RL 0,35W 24,3KOHM+-1%TK50 RESISTOR DRALORIC SMA/207/24,3K-F-C	RL 083.1574	
R16	RL 0,35W 1,74KOHM+-1%TK50 RESISTOR DRALORIC SMA0207/1,74K-F-D	RL 083.0784	
R17	RL 0,35W 562 OHM+-1%TK50 RESISTOR DRALORIC SMA0207/5620HM-F-D	RL 083.0461	
R18	RL 0,35W 11,0KOHM+-1%TK50 RESISTOR DRALORIC SMA0207/11K-F-D	RL 083.1322	
R19	RL 0,35W 11,0KOHM+-1%TK50 RESISTOR DRALORIC SMA0207/11K-F-D	RL 083.1322	
R20	RL 0,35W 221 OHM+-1%TK50 RESISTOR DRALORIC SMA0207/2210HM-F-D	RL 083.0084	

Kennzeichen Component No.	Benennung/Beschreibung Designation	Sachnummer Stock No.	enthalten in contained in
R21	RL 0,25W 47,5KOHM+-1%TK50 RESISTOR DRALORIC SMA/207/47,5K-F-C	RL 083.1800	
R22	RL 0,35W 392 OHM+-1%TK50 RESISTOR DRALORIC SMA0207/392K-F-C	RL 082.2183	
R23	RL 0,35W 22,1KOHM+-1%TK50 RESISTOR DRALORIC SMA/207/22,1K-F-C	RL 083.1545	
R24	RL 0,35W 475 OHM+-1%TK50 RESISTOR DRALORIC SMA0207/475OHM-F-D	RL 083.0390	
R26	RL 0,35W 1KOHM+-1%TK50 RESISTOR DRALORIC SMA0207/1K-F-C	RL 082.2160	
R27	RL 0,35W 4,75KOHM+-1%TK50 RESISTOR DRALORIC SMA0207/4,75K-F-D	RL 083.1097	
R28	RL 0,35W 1KOHM+-1%TK50 RESISTOR DRALORIC SMA0207/1K-F-C	RL 082.2160	
R29	RL 0,35W 100 OHM+-1%TK50 DEPOS.-CARBON RESISTOR DRALORIC SMA0207/100/HM-F-D	RL 082.6543	
R30	RL 0,35W 274 OHM+-1%TK50 RESISTOR DRALORIC SMA0207/274OHM-F-D	RL 083.0178	
R70	RL 0,35W 3,32KOHM+-1%TK50 RESISTOR DRALORIC SMA0207/3,32K-F-D	RL 083.0990	
BIS/TO R75			
R80	RL 0,35W 10,0KOHM+-1%TK50 RESISTOR DRALORIC SMA0207/10K-F-D	RL 083.1297	
BIS/TO R87			
S1	FP INDIREKT.STECKERL.36P. PIN CONNECTOR BERG 75160-102-36	FP 242.3600	
BIS/TO S4			
	4X3-POLIG/4X3 PINS		
ST1	VL WIRE-WRAP PIN BERG NR. 75 403-001	VL 088.4507	
ST40	ENTHALTEN IN/INCLUDED IN LEITERPLATTE/PCB		
ST41	ENTHALTEN IN/INCLUDED IN LEITERPLATTE/PCB		
ST44A	FP INDIREKT.STECKERL.36P. PIN CONNECTOR BERG 75160-102-36	FP 242.3600	
	10-POLIG/10 PINS		
ST44B	FP INDIREKT.STECKERL.36P. PIN CONNECTOR BERG 75160-102-36	FP 242.3600	

Für diese Unterlage behalten wir uns alle Rechte vor

Kennzeichen / Component No.	Benennung/Beschreibung / Designation	Sachnummer / Stock No.	enthalten in / contained in
	10-POLIG/10 PINS		
S1A	FP KURZSCHL.BUCHSE OFFEN SHORTING PLUG BERG 76264-101	FP 342.1895	
S2A	FP KURZSCHL.BUCHSE OFFEN SHORTING PLUG BERG 76264-101	FP 342.1895	
S3A	FP KURZSCHL.BUCHSE OFFEN SHORTING PLUG BERG 76264-101	FP 342.1895	
S4A	FP KURZSCHL.BUCHSE OFFEN SHORTING PLUG BERG 76264-101	FP 342.1895	
T1	AK BCY79IX PNP 45V 200MA TRANSISTOR SIEMENS BCY79IX	AK 010.3777	
T2	AK BCY79IX PNP 45V 200MA TRANSISTOR SIEMENS BCY79IX	AK 010.3777	
T3	AK 2N2222A NPN 40V 800MA TRANSISTOR VALVO 2N2222A	AK 010.5405	

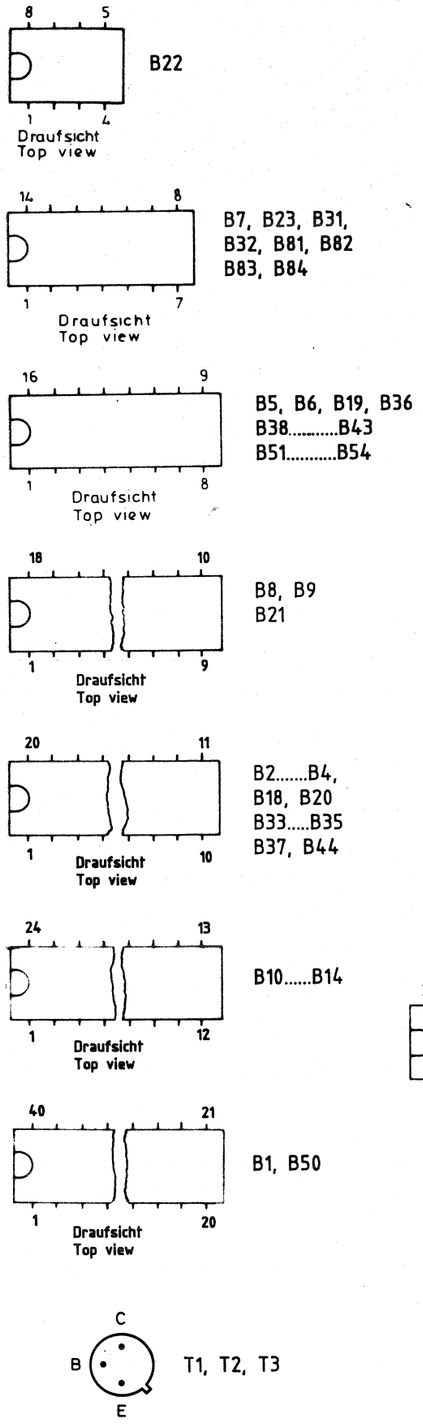

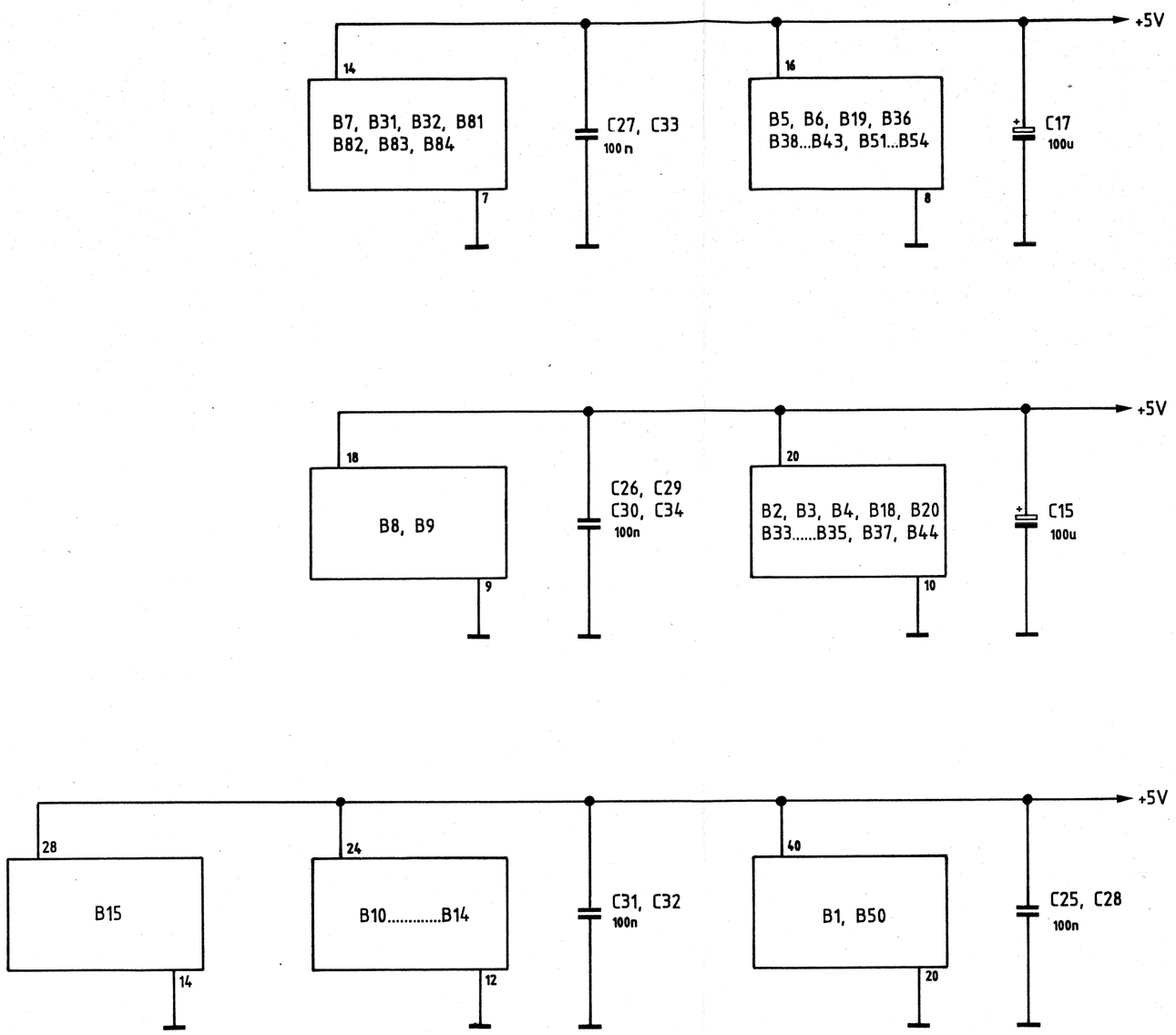

Stromlauf gilt für VAR 02, 03, 04, 54
Circuit diagramm is valid for model 02, 03, 04, 54

A	31341	5.84	ib
Änd. Zust.	Änderungs-Mitteilung	Tag	Name

Maße ohne Toleranzangabe

1KGA	Tag	Name
Bearb.	12.83	Ls
Gepr.		
Norm		

ROHDE&SCHWARZ

zu Gerät SMPC

Maßstab

Halbzeug, Werkstoff

Benennung

Rechner SMPC / Computer

Z

Zeichn.-Nr. 356.1405 S

Blatt-Nr. 1 v. 2 Bl.

reg. i. V. 355.9519 V

erste Z. 300.1000

Für diese Zeichnung behalten wir uns alle Rechte vor.

PF 095 2493 - 11.78

Ansicht und Leitungsführung Bauteilseite
View of tracks on component side

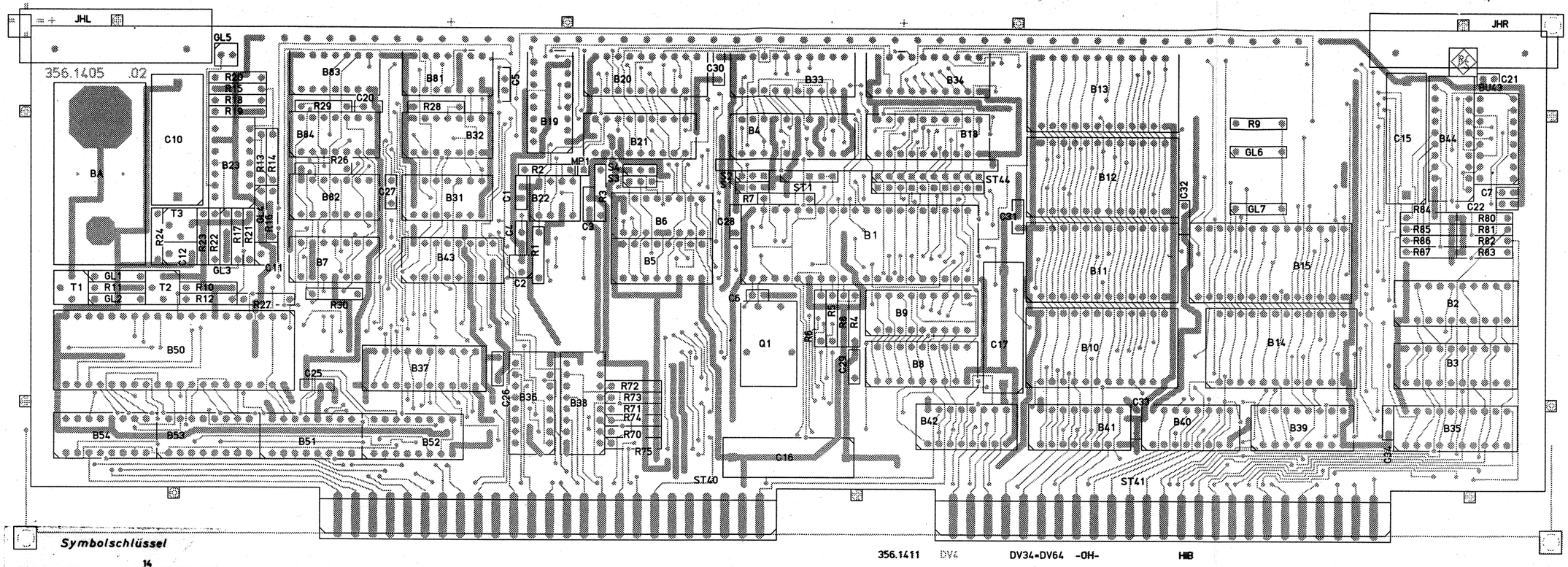

Symbolschlüssel

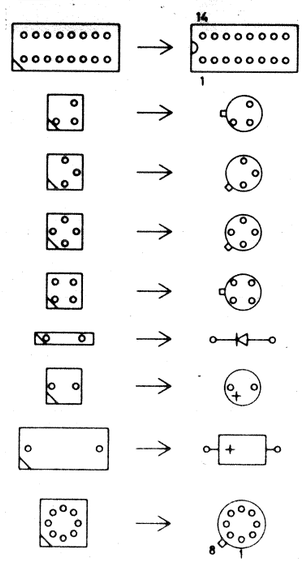

Achtung! MOS-Bauteile
Caution. MOS components

				Maße ohne Toleranzangabe		Maßstab 1 : 1	
						Halbzeug, Werkstoff	
				1KGA	Tag / Name	Benennung: Rechner	Z
				Bearb.	1.84 / GS		
				Gepr.			
				Norm			
And. Zust.	Änderungs-Mitteilung	Tag	Name	ROHDE&SCHWARZ		Zeichn.-Nr. 356.1405 01	Blatt-Nr. 2 v. Bl.
				zu Gerät SMPC		reg. i. V. 355.9519V	erste Z. 300.1000

ISO-Projektion
Methode E

Für diese Unterlage behalten wir uns alle Rechte vor.

Ansicht und Leitungsführung Lötseite
View of tracks on solder side

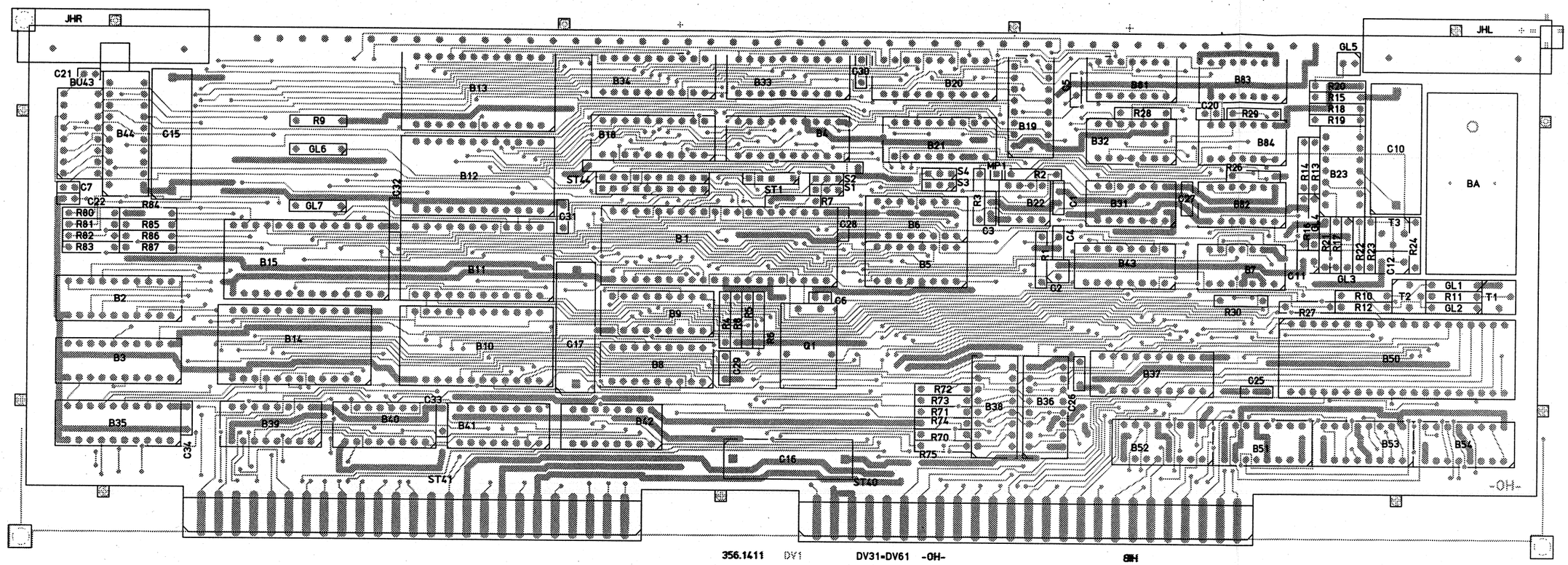

356.1411 DV1 DV31=DV61 -OH- 8H

Symbolschlüssel

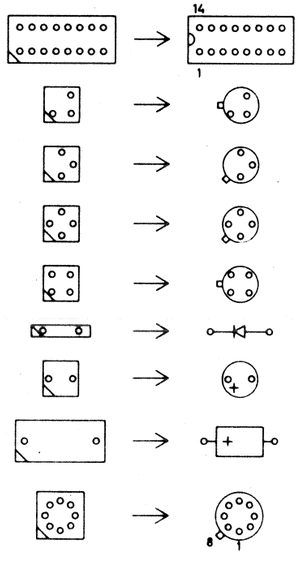

Achtung! MOS-Bauteile
Caution. MOS components

				Maße ohne Toleranzangabe		Maßstab 1 : 1	
						Halbzeug, Werkstoff	
				1KGA	Tag / Name	Benennung: Rechner	Z
				Bearb.	1.84 / GS		
				Gepr.			
				Norm			
And. Zust.	Änderungs-Mitteilung	Tag	Name	ROHDE & SCHWARZ		Zeichn.-Nr 356.1405 01	Blatt-Nr 3
				zu Gerät SMPC		reg. i. V. 355.9519V erste Z 300.1000	v Bl.

ISO-Projektion
Methode E

Für diese Unterlage behalten wir uns alle Rechte vor.

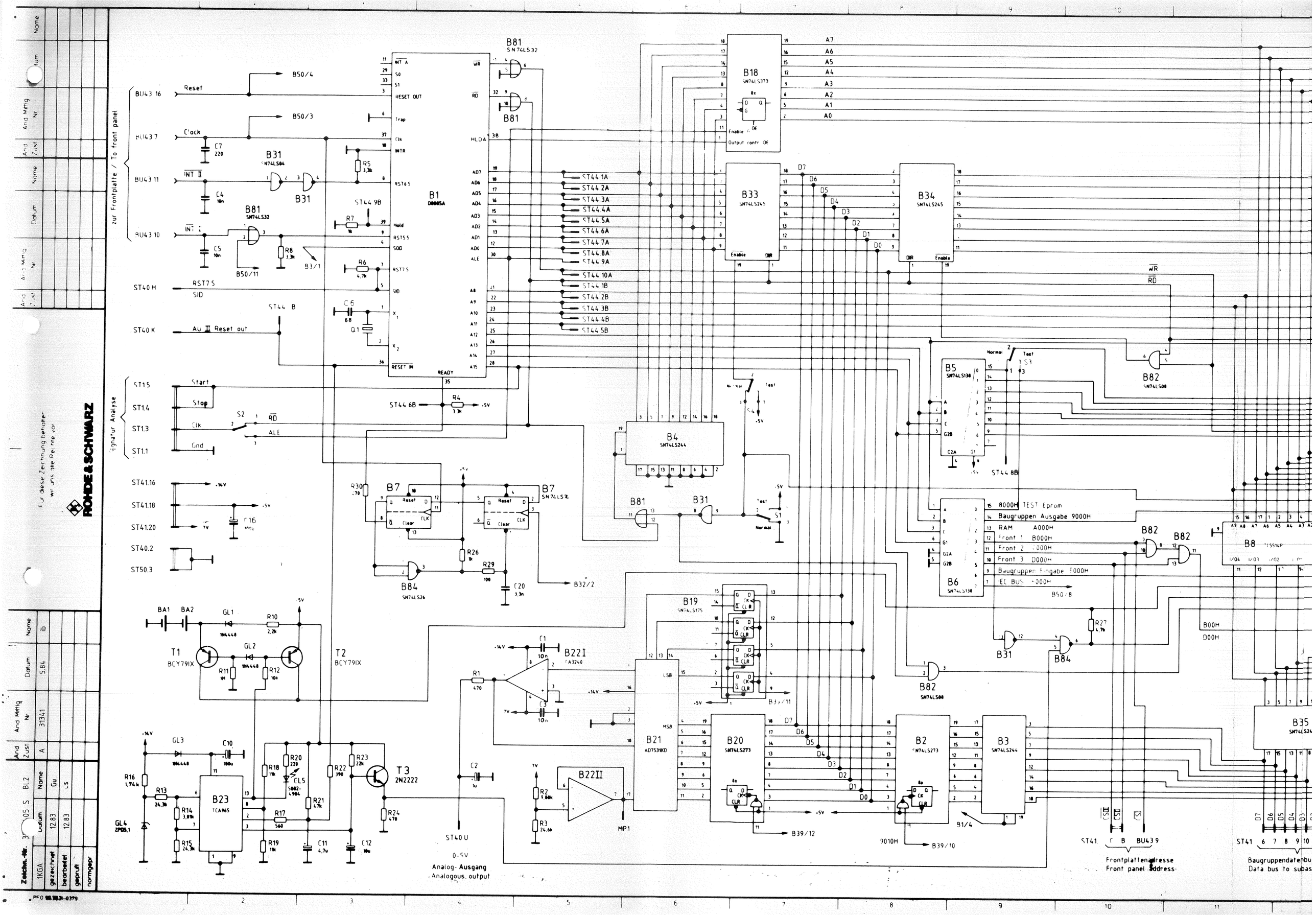

Für diese Zeichnung behalten wir uns alle Rechte vor

ROHDE & SCHWARZ

Zeichn.-Nr.	3[illegible]05 S	Bl.2						
	Datum	Name	And Zust	And Mittlg Nr	Datum	Name	And Zust	And Mittlg Nr
1KGA	12.83	Gu.	A	31341	5.84	ib		
gezeichnet	12.83	Ls						
bearbeitet								
geprüft								
normgepr								

PFO [illegible]

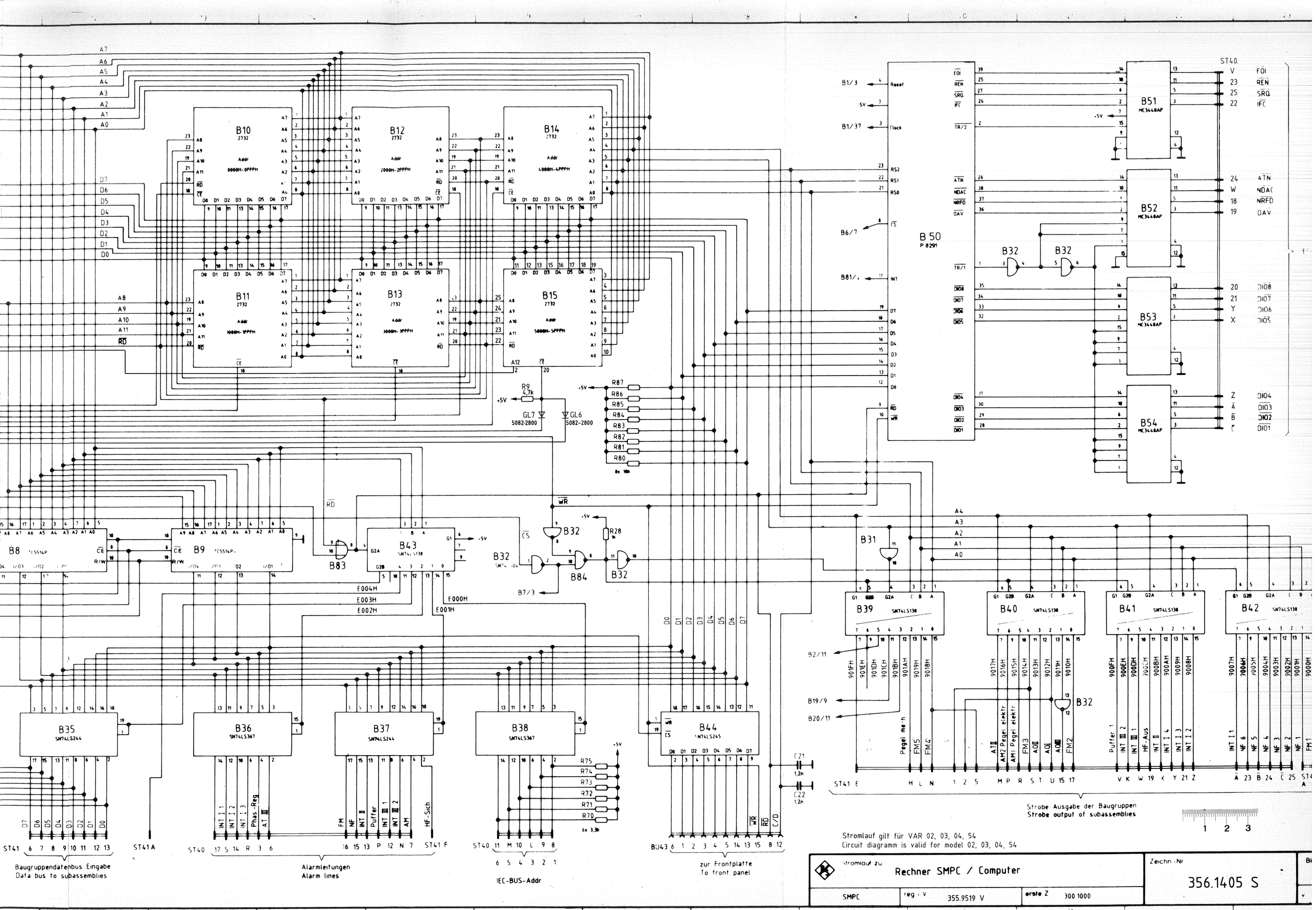
B10 2732 Addr 0000H-0FFFH
B12 2732 Addr 2000H-2FFFH
B14 2732 Addr 4000H-4FFFH
B11 2732 Addr 1000H-1FFFH
B13 2732 Addr 3000H-3FFFH
B15 2732 Addr 5000H-5FFFH
B50 P 8291
B51 MC3448AP
B52 MC3448AP
B53 MC3448AP
B54 MC3448AP
B8 TCS514P
B9 TCS514P
B43 SN74LS138
B39 SN74LS138
B40 SN74LS138
B41 SN74LS138
B42 SN74LS138
B35 SN74LS244
B36 SN74LS367
B37 SN74LS244
B38 SN74LS367
B44 SN74LS245
B31
B32
B83
B84
R9 4,7k
GL7 5082-2800
GL6 5082-2800
R28 1k
R87 R86 R85 R84 R83 R82 R81 R80 8x 10k
R75 R74 R73 R72 R71 R70 6x 3,3k
C21 1,2n
C22 1,2n
ST40.
ST41 E
ST41 A
ST41 F
ST40
BU43
Baugruppendatenbus Eingabe
Data bus to subassemblies
Alarmleitungen
Alarm lines
IEC-BUS-Addr
zur Frontplatte
To front panel
Strobe Ausgabe der Baugruppen
Strobe output of subassemblies
Stromlauf gilt für VAR 02, 03, 04, 54
Circuit diagramm is valid for model 02, 03, 04, 54
Stromlauf zu
Rechner SMPC / Computer
SMPC
reg i V 355.9519 V
erste Z 300 1000
Zeichn.-Nr
356.1405 S

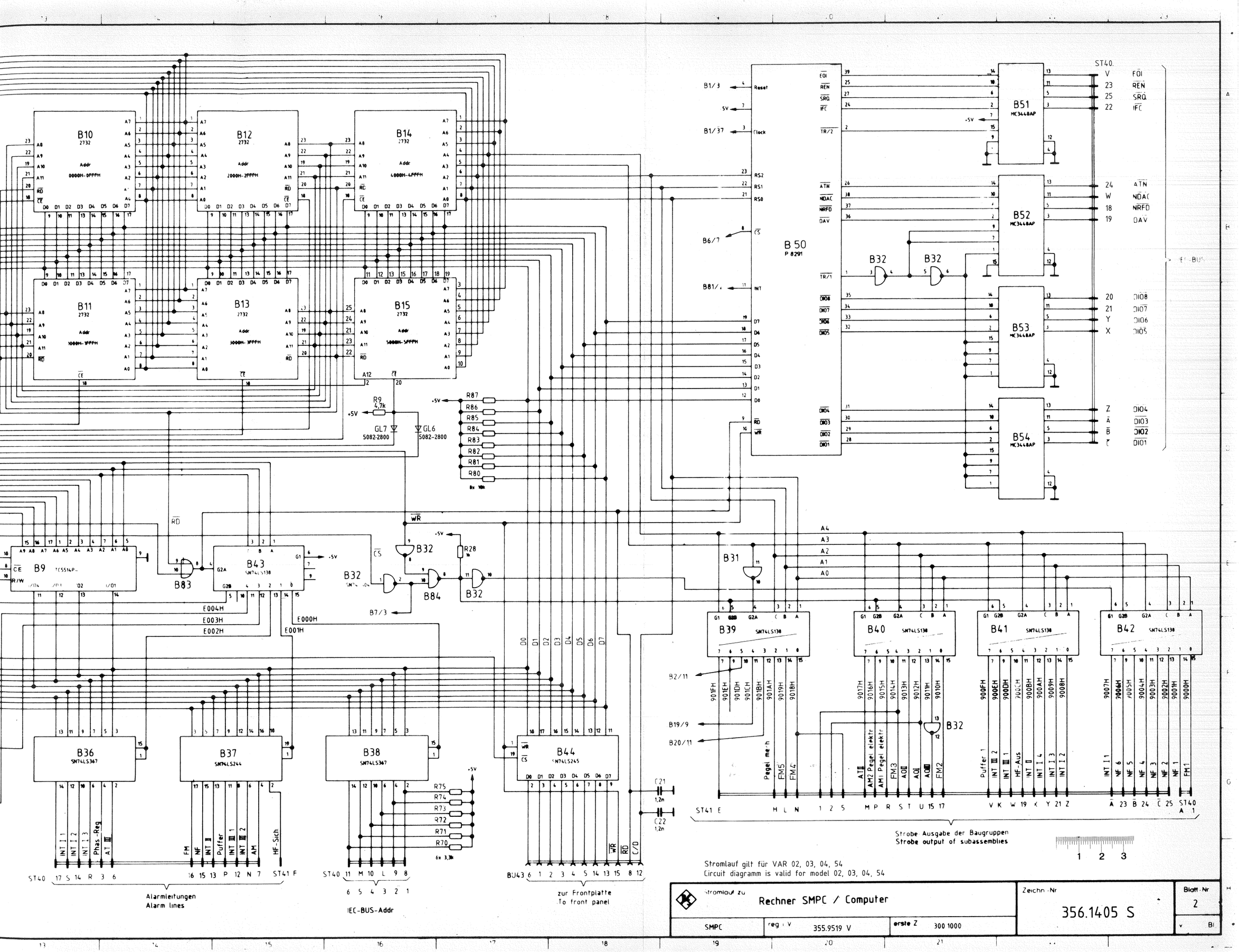
B10 2732 Addr 0000H-0FFFH
B12 2732 Addr 2000H-2FFFH
B14 2732 Addr 4000H-4FFFH
B11 2732 Addr 1000H-1FFFH
B13 2732 Addr 3000H-3FFFH
B15 2732 Addr 5000H-5FFFH
B50 P 8291
B51 MC3448AP
B52 MC3448AP
B53 MC3448AP
B54 MC3448AP
B9 TCS514P
B43 SN74LS138
B36 SN74LS367
B37 SN74LS244
B38 SN74LS367
B44 SN74LS245
B39 SN74LS138
B40 SN74LS138
B41 SN74LS138
B42 SN74LS138
ST40
ST41
IEC-BUS
Alarmleitungen
Alarm lines
IEC-BUS-Addr
zur Frontplatte
To front panel
Strobe Ausgabe der Baugruppen
Strobe output of subassemblies
Stromlauf gilt für VAR 02, 03, 04, 54
Circuit diagramm is valid for model 02, 03, 04, 54
Stromlauf zu
Rechner SMPC / Computer
SMPC
reg i V 355.9519 V
erste Z 300 1000
Zeichn.-Nr
356.1405 S
Blatt-Nr
2

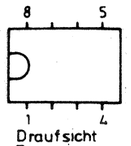

B22

Draufsicht
Top view

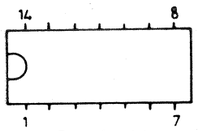

B7, B23, B31,
B32, B81, B82
B83, B84

Draufsicht
Top view

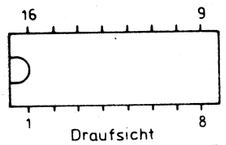

B5, B6, B19, B36
B38.....B43
B51.....B54

Draufsicht
Top view

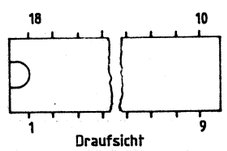

B8, B9
B21

Draufsicht
Top view

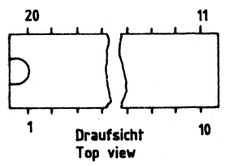

B2.....B4,
B18, B20
B33.....B35
B37, B44

Draufsicht
Top view

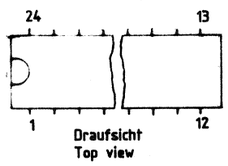

B10.....B14

Draufsicht
Top view

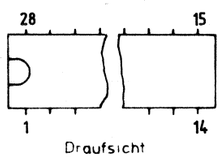

B15

Draufsicht
Top view

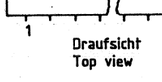

T1, T2, T3

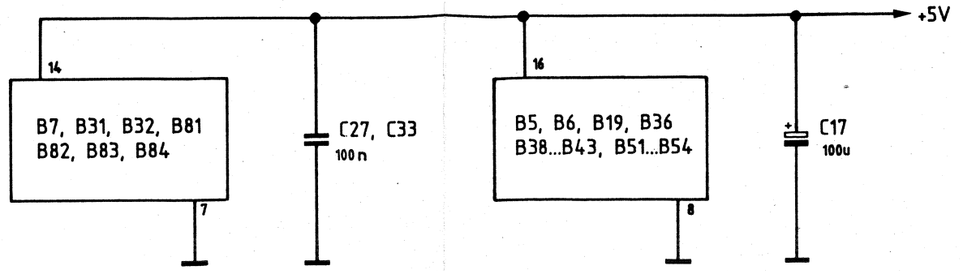

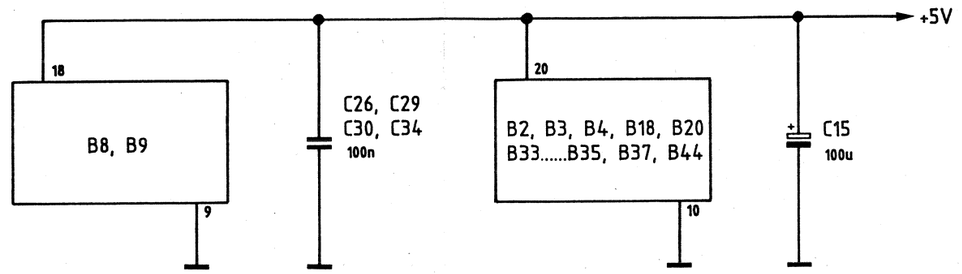

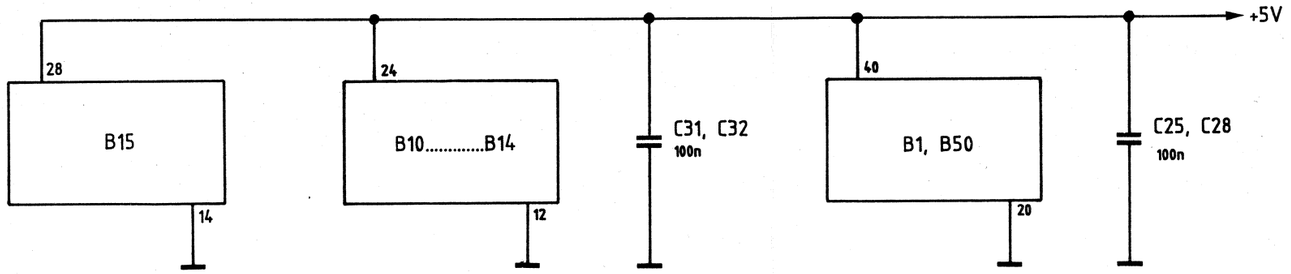

Stromlauf gilt für VAR 02, 03, 04, 54
Circuit diagramm is valid for model 02, 03, 04, 54

A	31341	5.84	ib	Maße ohne Toleranzangabe		Maßstab	
						Halbzeug, Werkstoff	
				1KGA	Tag / Name	Benennung	Z
				Bearb.	12.83 / Ls	Rechner SMPC / Computer	
				Gepr.			
				Norm			
And. Zust.	Änderungs-Mitteilung	Tag	Name	ROHDE&SCHWARZ		Zeichn.-Nr. 356.1405 S	Blatt-Nr. 1 v. 2 Bl.
				zu Gerät SMPC		reg. i V 355.9519 V	erste Z 300.1000

Für diese Zeichnung behalten wir uns alle Rechte vor.

Ansicht und Leitungsführung Bauteilseite
View of tracks on component side

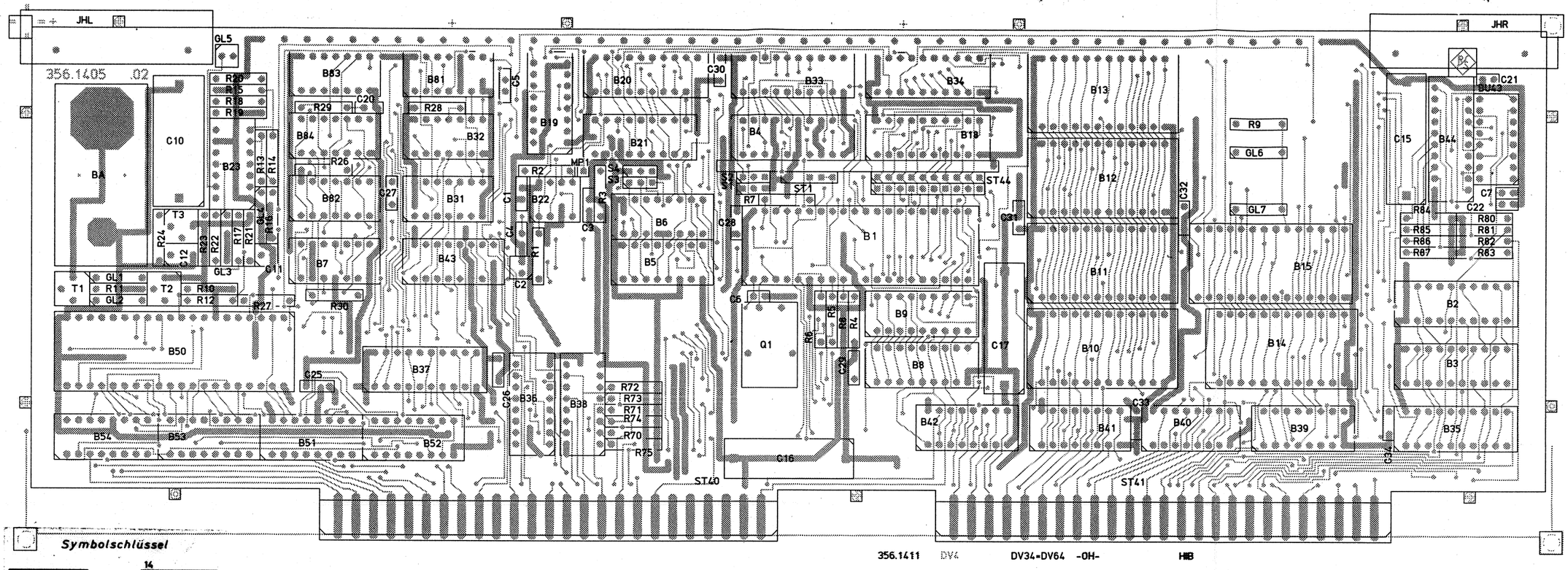

356.1411 DV4 DV34-DV64 -OH- HIB

Symbolschlüssel

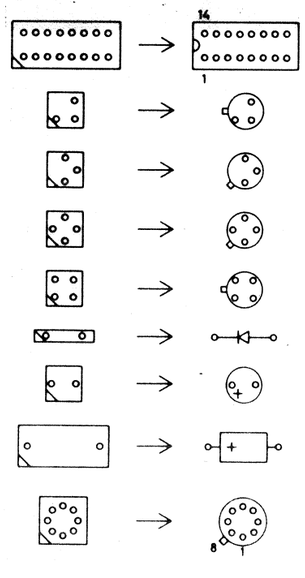

Achtung! MOS-Bauteile
Caution. MOS components

				Maße ohne Toleranzangabe		Maßstab 1 : 1	
						Halbzeug, Werkstoff	
				1KGA	Tag	Name	Benennung: Rechner — Z
				Bearb.	1.84	GS	
				Gepr			
				Norm			
				ROHDE&SCHWARZ			Zeichn.-Nr 356.1405 01 — Blatt-Nr 2 — v — Bl
And.	Zust.	Änderungs-Mitteilung	Tag	Name	zu Gerät SMPC		reg. i. V. 355.9519V — erste Z 300.1000

ISO-Projektion
Methode E

Für diese Unterlage behalten wir uns alle Rechte vor.

Ansicht und Leitungsführung Lötseite
View of tracks on solder side

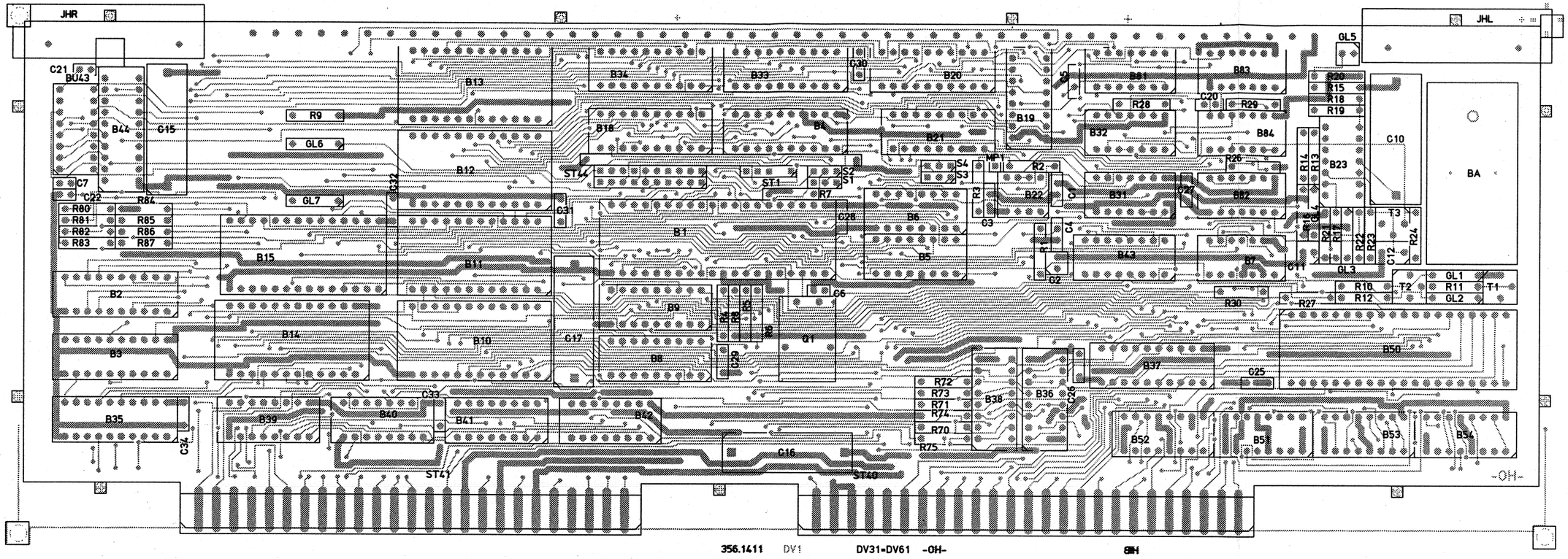

356.1411 DV1 DV31=DV61 -OH- 8H

Symbolschlüssel

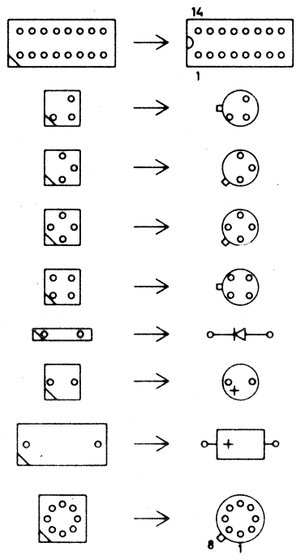

Achtung! MOS-Bauteile
Caution. MOS components

				Maße ohne Toleranzangabe		Maßstab 1 : 1	
						Halbzeug, Werkstoff	
				1KGA	Tag	Name	Benennung: Rechner
				Bearb	1.84	GS	Z
				Gepr			
				Norm			
And Zust	Änderungs-Mitteilung	Tag	Name	ROHDE&SCHWARZ		Zeichn-Nr 356.1405 01	Blatt-Nr 3 v Bl
				zu Gerät SMPC		reg i V 355.9519V	erste Z 300.1000

ISO-Projektion
Methode E

Für diese Unterlage behalten wir uns alle Rechte vor.

ROHDE&SCHWARZ

SERVICE INSTRUCTIONS FOR

FM Stage

300.7014 (Y2)

Table of Contents

		Page
5	Service Instructions for FM Stage 300.7014 (Y2)	5.1
5.1	Circuit Description	5.1
5.1.1	FM Deviation Setting	5.1
5.1.2	Oscillator with Control Loop	5.1
5.1.3	Control-voltage Memory for FM DC	5.2
5.2	Checking and Adjusting	5.3
5.2.1	Checking and Adjusting the Modulation Distortion and the Deviation	5.3
5.2.2	Checking the Frequency Response	5.4
5.2.3	Adjusting the Control Voltage	5.5
5.2.4	Setting the Output Level	5.5
5.2.5	Adjusting the Comparator Offset	5.5
5.3	Troubleshooting	5.6
5.3.1	Interfaces	5.6

Parts list
Circuit diagram
Components location plans

5.1 Circuit Description

(See circuit diagram 300.7014 S and Fig. 5-1)

The FM Stage generates a frequency-modulated 45-MHz signal which is mixed in Y6 (INT III) during FM operation. The subassembly consists of an attenuator for the FM deviation, a phase-controlled 45-MHz oscillator and a control-voltage memory used during FM DC operation.

5.1.1 FM Deviation Setting

During FM AC operation, the 1-V_{rms} input signal is fed to the FET switch B2 via a high-pass filter. The filter is short circuited by a relay during FM DC operation. When ΦM or FM with preemphasis (50 and 75 µs) are selected, the corresponding preemphasis is provided by B3 and B4, and when FM is selected, the signal is fed directly to B6 which amplifies the level to 3 V_{rms}. A multiplying D/A converter B7 with a 10-bit resolution provides the fine adjustment for the deviation. The coarse adjustment is achieved by the switchable fixed dividers 1/1, 2/1, 4/1 and 1/1, 8/1, 64/1. The very high input impedance amplifier B10 decouples the two dividers.

The following amplifier B12 together with R31 sets the FM deviation. In addition, a DC voltage of 6.5 V is added to the modulation signal as bias for the modulation diode.

The modulation signal is coupled out via B13 for modulating the Buffer (Y7).

5.1.2 Oscillator with Control Loop

The active component in the 45-MHz Colpitts oscillator is the high-current FET T9. A varicap diode GL20 provides the FM modulation, its coupling and bias voltage are set by C124 and R105. Frequency tuning is achieved with a second varicap diode GL21. The oscillator's centre frequency is adjusted with C110. The signal is fed to the output socket BU51 via a buffer stage T10, a further amplifier T11 and a low-pass filter. R45 is used to set the output level to (0 ±1.0) dBm.

The signal from the oscillator, after level conversion by T12 and T13, is divided by 288 in B30 I, B31 and B32 I, and the 10-MHz reference frequency is divided by 64 in B30 II and B32 II. The phase comparison of both divided frequencies occurs in B37. In order to achieve a short response time for the control loop, the loop bandwidth is switchable (0.5 to 30 Hz). The reference frequency, via B34, B35 and B36, is switched between 1.563 and 156.25 kHz as well as the time constant of the control amplifier by B38. The switching process is controlled by the retriggerable monostable B43 II (τ = approx. 120 ms) and the NAND gate B47.

The control voltage is fed to the varicap diode GL21 via the switch B40 which is monitored by the window comparator B41.

5.1.3 Control-voltage Memory for FM DC

In order to minimize the frequency error when switching from FM AC to FM DC operation, the control voltage at the time of switchover is stored. To this end, a 12-bit D/A converter is driven by a counter.

A 12-bit counter B45, set to zero by a start signal from B43 I, controls the D/A converter B46. The clock for the counter is derived from the reference frequency. The output voltage from the D/A converter is fed, after amplification by B50, to comparator B49 where it is compared with the control voltage. If the output voltage from B50 II is greater than the control voltage, the comparator switches and stops the counter. By adjusting the comparator's off-set with R92 to -1/2 LSB, the maximum difference between the two voltages is ±1/2 LSB of the D/A converter. The tuning voltage is switched from control to memory by B40.

5.2 Checking and Adjusting

5.2.1 Checking and Adjusting the Modulation Distortion and the Deviation

Preparation

- distortion meter (AF generator) to BU54, modulation frequency of 1 kHz,
- modulation analyzer to BU51,
- distortion meter (analyzer input) to AF output of modulation analyzer,
- oscilloscope to X-Y operation: X-channel to AF signal, Y-channel to distortion meter (output for distorted signal without fundamental).

Checks

Set SMPC to a carrier frequency of 680 MHz and a deviation of 1420 kHz. The deviation at output BU51 is to be (500 ±15) kHz and modulation distortion K 54 dB down, typically 60 dB. Reduce SMPC's deviation setting to 790 kHz. The deviation at BU51 is now to be (280 ±8) kHz with a modulation distortion of 60 dB down, typically 66 dB.

Adjustments

Set SMPC to a carrier frequency of 680 MHz and a deviation of 1420 kHz. Minimize the modulation distortion by alternately adjusting R105 and C124. At the same time, hold the deviation constant at (500 ±50) kHz with R31. Finally, align the deviation of the complete unit according to 4.3.9.

5.2.2 Checking the Frequency Response

Preparation

- connect a voltmeter to MP4,
- connect an AF generator, level set to 1 V_{rms}, to the FM input socket 31.

Set SMPC to carrier frequency of 100 MHz, external FM and a deviation of 20 kHz or 2.5 rad. Measure the relative level D when switched to ΦM and FM with and without preemphasis.

Nominal Levels

FM without preemphasis

f_{mod} (kHz)	D_{max} (dB)
0.04 to 53	0.02
53 to 125	0.1

FM with preemphasis
Reference level is the level at 0.1 kHz, the tolerance is 0.2 dB.

f_{mod} (kHz)	D (dB) with 50 µs	D (dB) with 75 µs
0.5	0.1	0.2
1	0.4	0.9
2	1.4	2.8
5	5.4	8.2
10	11.2	13.7
15	13.7	16.1

Phase modulation

Reference level is the level at 8 kHz, the tolerance is ±0.2 dB.

f_{mod} (kHz)	D (dB)
0.25	-30
0.5	-24
1	-18
2	-12
4	-6

5.2.3 Adjusting the Control Voltage

Preparation

- connect an oscilloscope via a probe to MP11.

Set SMPC to 680 MHz and FM/ΦM off. Adjust the control voltage at MP11 to (6 ±0.5) kHz with C110.

5.2.4 Setting the Output Level

Preparation

- connect a spectrum analyzer to BU51.

Switch on SMPC and, without modulation, adjust R45 for a level of (0 ±1) dBm.

5.2.5 Adjusting the Comparator Offset

- connect BR14 and BR15 in positions 2-3,
- connect an oscilloscope to MP12, measurement range 20 mV/div.

Switch on SMPC and adjust R92 to the position where the voltage at MP12 jumps by approximately 10 mV. Reconnect BR14 and BR15 to positions 1-2.

5.3 Troubleshooting

The operation of the AF deviation is checked by the following measurements:

f_{SMPC} = 680 MHz, f_{mod} = 1 kHz

Deviation (kHz)	Divider	V_{MP2}/V_{rms}	V_{MP3}/V_{rms}
1600 - 800	1/1	3 - 1.5	3 - 1.5
800 - 400	2/1	3 - 1.5	1.5 - 0.75
400 - 200	4/1	3 - 1.5	0.75 - 0.375
200 - 100	8/1	3 - 1.5	0.375 - 0.188
100 - 50	16/1	3 - 1.5	188 - 94 mV
50 - 25	32/1	3 - 1.5	94 - 47 mV
25 - 12.5	64/1	3 - 1.5	47 - 23.5 mV
12.5 - 6.25	128/1	3 - 1.5	23.5 - 11.75 mV
6.25 - 0.01	256/1	3 - 0.048	11.75 - 0.019 mV

5.3.1 Interface

Digital Interface

Data bus ST50	D7 .22	D6 .21	D5 .20	D4 .19	D3 .18	D2 .17	D1 .16	D0 .15	Strobe ST60
1	bit 7 ←							bit 0	1
0	Deviation fine adjustment H								.2
1	1/64	1/8	1/1	1/4	1/2	1/1			2
0	2nd divider off			1st divider off			bit 9 to bit 8		.3
1	off f_{mod}	off with Y7 moded	on	DC FM	75 µs pree.	FM+pree.	ΦM	FM	3
0	on	on	off	AC	50 µs	type of modulation off			.4

ST 50.1 alarm output (to microprocessor Y1) 0 = alarm.

Data is transferred from the data bus during an L to H transition of the strobe.

Deviations up to 564.7 kHz can be set. For deviations h from 282.35 to 564.7 kHz, the data word H is given by:

$$H = \frac{h\ (kHz)}{564.7} \times 1023.$$

For smaller deviations, sufficient dividers must be switched into circuit so that the undivided deviation lies in this range. The dataword H for the undivided deviation is calculated as above and the required division factors switched in. The factors of both dividers are then multiplied. H is transferred in binary code.

Example: 4.3 kHz x 128 = 550.4 kHz

$$H = \frac{550.4}{564.7} \times 1023 = 997$$

1st divider 1/2, 2nd divider 1/64

Analog Interface

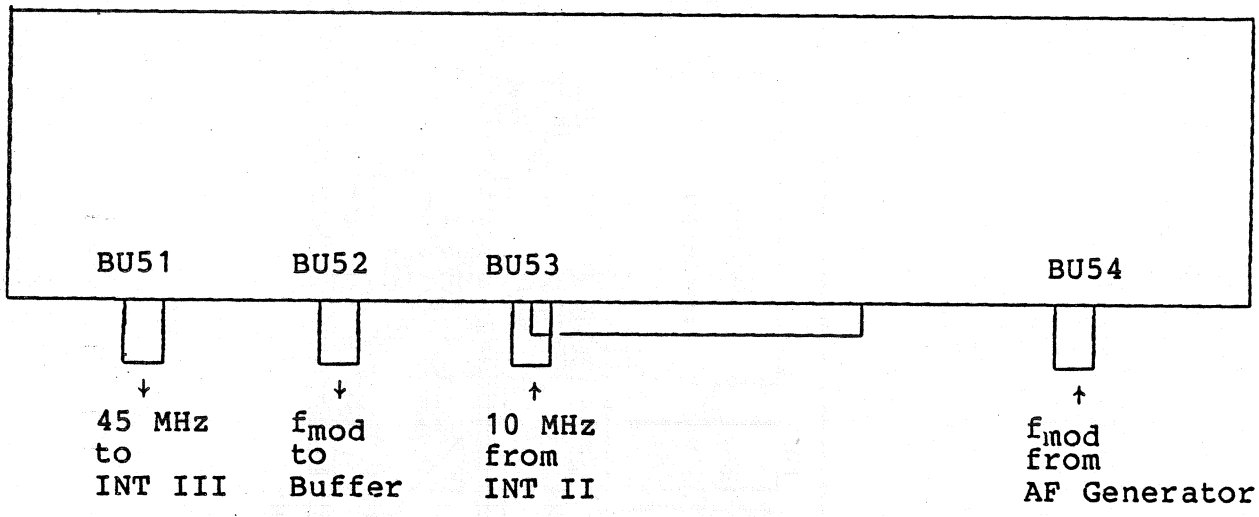

BU	51	52	53	54
f	45 MHz	10 Hz to 125 MHz	10 MHz	10 Hz to 125 kHz
Level	2 ±1 dBm	up to 1.81 V_{pp}	3.5 V_{pp}	1 V_{rms}
R_i	50 Ω	0 Ω	1 kΩ approx.	47 to 470 kΩ
Coupling	AC	DC	AC	AC/DC
Signal shape	sine	sine	square	sine

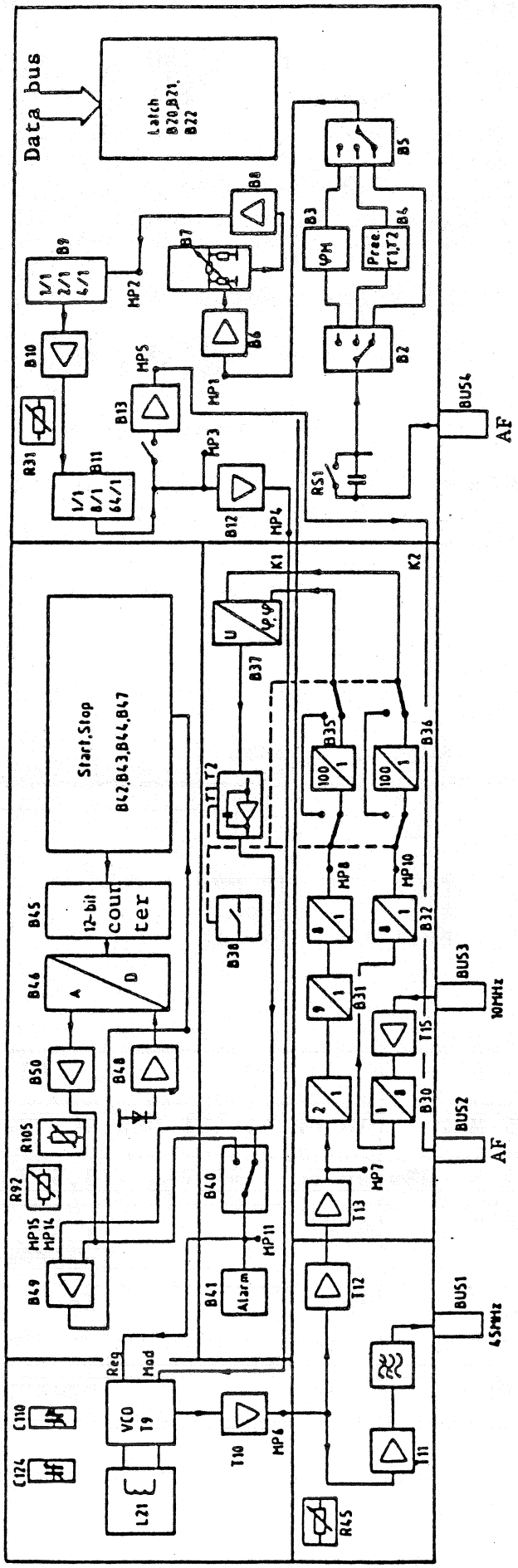

Fig. 5-1 Block diagram

ROHDE & SCHWARZ
MÜNCHEN

Schaltteillisten
Stromläufe
Bestückungspläne

Parts lists
Circuit diagrams
Components plans

R 29500 Bl. 2

Kennzeichen Component No.	Benennung/Beschreibung Designation	Sachnummer Stock No.	enthalten in contained in
B2	BJ LF13331N 4X ANALOGSCH ANALOG SWITCH NSC LF13331N	BJ 356.0515	300.5057
B3	BO LF353N 2XFET OPAMP OPERATIONAL AMPLIFIER NSC LF353N	BO 342.2291	300.5057
B4	BO NE5532AFE 2XL.N.OPAMP OPERATIONAL AMPLIFIER VALVO NE5532AFE	BO 356.0450	300.5057
B5	BJ LF13331N 4X ANALOGSCH ANALOG SWITCH NSC LF13331N	BJ 356.0515	300.5057
B6	BO LF156J BIFET OPAMP OPERATIONAL AMPLIFIER MOTOROLA LF 156 J	BO 645.7251	300.5057
B7	BJ AD7533CD 10B.D/A-CONV D/A-CONVERTER ANALOG-DEV AD7533CD	BJ 300.8740	300.5057
B8	BO LF156J BIFET OPAMP OPERATIONAL AMPLIFIER MOTOROLA LF 156 J	BO 645.7251	300.5057
B9	BJ LF13331N 4X ANALOGSCH ANALOG SWITCH NSC LF13331N	BJ 356.0515	300.5057
B10	BO SE5534AFE LOW N.OPAMP OPERATIONAL AMPLIFIER SIGNETICS SE5534AFE	BO 301.3335	300.5057
B11	BJ LF13331N 4X ANALOGSCH ANALOG SWITCH NSC LF13331N	BJ 356.0515	300.5057
B12	BO NE5532AFE 2XL.N.OPAMP OPERATIONAL AMPLIFIER VALVO NE5532AFE	BO 356.0450	300.5057
B13	BO NE5532AFE 2XL.N.OPAMP OPERATIONAL AMPLIFIER VALVO NE5532AFE	BO 356.0450	300.5057
B20	BL SN74LS273N 8BIT-D-REG. 8BIT-D-REGISTER TEXAS SN74LS273N	BL 214.8998	300.5057
B21	BL SN74LS273N 8BIT-D-REG. 8BIT-D-REGISTER TEXAS SN74LS273N	BL 214.8998	300.5057
B22	BL SN74LS273N 8BIT-D-REG. 8BIT-D-REGISTER TEXAS SN74LS273N	BL 214.8998	300.5057
B30	BL SN74S197N 4BIT-COUNTER IC 4BIT-COUNTER SN74S197N TEXAS SN74S197N	BL 334.3570	300.5057
B31	BL SN54S169J 4BIT-COUNTER IC COUNTER SN54S169J TEXAS SN54S169J	BL 302.6638	300.5057
B32	BL SN74LS393N 2XBIN.ZAEHL IC 2XBIN.COUNT.SN74LS393N TEXAS SN74LS393N	BL 300.6982	300.5057

Für diese Unterlage behalten wir uns alle Rechte vor

Kennzeichen Component No.	Benennung/Beschreibung Designation	Sachnummer Stock No.	enthalten in contained in
B34	BL SN74LS02N 4/2INP.NOR IC NOR GATE SN74LS02N TEXAS SN74LS02ON	BL 266.4658	300.5057
B35	BL SN74LS390N 2XDEC.COUNT IC DECADE COUNTER SN74LS3 TEXAS SN74LS390N	BL 300.6760	300.5057
B36	BL SN74LS390N 2XDEC.COUNT IC DECADE COUNTER SN74LS3 TEXAS SN74LS390N	BL 300.6760	300.5057
B37	BL 11C44DC PHASE/FREQ.DET PHASE FREQU.DETECTOR FAIRCHILD 11C44PC	BL 300.9481	300.5057
B38	BJ DG201BK 4X ANALOGSCH ANALOG SWITCH SILICONIX DG201BK	BJ 550.1840	300.5057
B39	BO LF156J BIFET OPAMP OPERATIONAL AMPLIFIER MOTOROLA LF 156 J	BO 645.7251	300.5057
B40	BJ DG300CJ 2X ANALOGSCH ANALOG SWITCH SILICONIX DG300CJ	BJ 300.6118	300.5057
B41	BO LM193H 2X COMPAR COMPARATOR NSC LM193H	BO 262.6427	300.5057
B42	BL SN74LS10N 3/3INP.NAND IC NAND GATE SN74LS01N TEXAS SN74LS10N	BL 266.4670	300.5057
B43	BL SN74LS123N 2/MONOFLOP IC MONOFLOP SN74LS85N TEXAS SN74LS123N	BL 235.8468	300.5057
B44	BL SN74LS74AN 2/D-FLIPFL. IC FLIP-FLOP SN74LS74N TEXAS SN74LS74N	BL 266.7934	300.5057
B45	BL CD4040BF 12B. COUNTER COUNTER RCA CD4040BF	BL 495.0642	300.5057
B46	BJ AD7541KN 12B.D/A-CONV D/A-CONVERTER MPS MP-7621/7541KN	BJ 356.0467	300.5057
B47	BL SN74LS00N 4/2INP.NAND IC NAND GATE SN74LS00N TEXAS SN74LS00N	BL 266.4641	300.5057
B48	BO NE5532AFE 2XL.N.OPAMP OPERATIONAL AMPLIFIER VALVO NE5532AFE	BO 356.0450	300.5057
B49	BO CMP01EZ PREC COMPAR COMPARATOR PMI CMP-01EZ	BO 356.0444	300.5057
B50	BO LF412CN 2XFET OPAMP OPERATIONAL AMPLIFIER NSC LF412CN	BO 356.0521	300.5057
BR14	FP KURZSCHLUSSBUCHSE SHORTING PLUG PK 452-70302	FP 491.7042	300.5057
BR15	FP KURZSCHLUSSBUCHSE SHORTING PLUG PK 452-70302	FP 491.7042	300.5057

Kennzeichen Component No.	Benennung/Beschreibung Designation	Sachnummer Stock No.	enthalten in contained in
BU1	FP BUCHSE VERTIKAL P.V.1P SOCKET BERG 75377-001	FP 278.5577	300.5057
BIS/TO BU7			
BU10	FP BUCHSE VERTIKAL P.V.1P SOCKET BERG 75377-001	FP 278.5577	300.5057
BIS/TO BU17			
BU51	FJ EINBAUBUCHSE SYST.SMS FIXED SOCKET RADIALL R.299 012	300.6876	
BU52	FJ EINBAUBUCHSE SYST.SMS FIXED SOCKET RADIALL R.299 012	300.6876	
BU53	FJ EINBAUBUCHSE SYST.SMS FIXED SOCKET RADIALL R.299 012	300.6876	
BU54	FJ EINBAUBUCHSE SYST.SMS FIXED SOCKET RADIALL R.299 012	300.6876	
C1	CK 1UF+-10%50V5RM MKT CAPACITOR WIMA MKS2/50/1UF/10%	CK 099.2998	300.5057
C2	CC 100NF+-10%50V5K1200VIE CAPACITOR UNION CARB CK05BX104K	CC 084.5350	300.5057
C3	CC 100NF+-10%50V5K1200VIE CAPACITOR UNION CARB CK05BX104K	CC 084.5350	300.5057
C4	CE 47UF -10+100%40V 11X13 ELECTROLYTIC CAPACITOR SIEMENS B41316-B7476-Z	022.7589	300.5057
C5	CE 47UF -10+100%40V 11X13 ELECTROLYTIC CAPACITOR SIEMENS B41316-B7476-Z	022.7589	300.5057
C6	CC 10NF-20+50%7X8R6000 CAPACITOR VALVO 2222 63051 64051103	CC 087.7525	300.5057
C7	CK 1UF+-10%50V5RM MKT CAPACITOR WIMA MKS2/50/1UF/10%	CK 099.2998	300.5057
C9	CC 10NF-20+50%7X8R6000 CAPACITOR VALVO 2222 63051 64051103	CC 087.7525	300.5057
C10	CK 4,7NF+-1%63V6,3X11 KP PLASTIC-FOIL CAPACITOR SIEMENS B33531-A5472-F	CK 283.1701	300.5057
C11	CC 100NF+-10%50V5K1200VIE CAPACITOR UNION CARB CK05BX104K	CC 084.5350	300.5057
C12	CC 100NF+-10%50V5K1200VIE CAPACITOR UNION CARB CK05BX104K	CC 084.5350	300.5057

Für diese Unterlage behalten wir uns alle Rechte vor

Kennzeichen Component No.	Benennung/Beschreibung Designation	Sachnummer Stock No.	enthalten in contained in
C15	CK 1UF+-10%50V5RM MKT CAPACITOR WIMA MKS2/50/1UF/10%	CK 099.2998	300.5057
C16	CE 47UF -10+100%40V 11X13 ELECTROLYTIC CAPACITOR SIEMENS B41316-B7476-Z	022.7589	300.5057
C17	CE 47UF -10+100%40V 11X13 ELECTROLYTIC CAPACITOR SIEMENS B41316-B7476-Z	022.7589	300.5057
C18	CC 10NF-20+50%7X8R6000 CAPACITOR VALVO 2222 63051 64051103	CC 087.7525	300.5057
C19	CK 1,8NF+-1%63V6,3X11 KP PLASTIC-FOIL CAPACITOR SIEMENS B33531-A5182-F	CK 283.1699	300.5057
C20	CK 11NF+-1% 63V 7,5QUAD CAPACITOR SIEMENS B33531-A5113-F	CK 099.1679	300.5057
C21	CK 22NF+-1%63V8X8X11 KP CAPACITOR SIEMENS B33531-A5223-F	CK 213.4553	300.5057
C22	CC 10NF-20+50%7X8R6000 CAPACITOR VALVO 2222 63051 64051103	CC 087.7525	300.5057
C23	CC 10NF-20+50%7X8R6000 CAPACITOR VALVO 2222 63051 64051103	CC 087.7525	300.5057
C26	CC 4,7NF+-10%6X9R2000 CAPACITOR VALVO 2222 63051 472	CC 087.7102	300.5057
C27	CC 1NF+-10%63V K2000 CERAMIC CAPACITOR VALVO 2222 63051 102	CC 022.0784	300.5057
C28	CC 1NF+-10%63V K2000 CERAMIC CAPACITOR VALVO 2222 63051 102	CC 022.0784	300.5057
C29	CC 4,7NF+-10%6X9R2000 CAPACITOR VALVO 2222 63051 472	CC 087.7102	300.5057
C30	CC 4,7NF+-10%6X9R2000 CAPACITOR VALVO 2222 63051 472	CC 087.7102	300.5057
C31	CC 4,7NF+-10%6X9R2000 CAPACITOR VALVO 2222 63051 472	CC 087.7102	300.5057
C32	CC 1NF+-10%63V K2000 CERAMIC CAPACITOR VALVO 2222 63051 102	CC 022.0784	300.5057
C33	CC 8,2PF+-0,25PF3X4NP0 CAPACITOR VALVO 2222 678 09828	CC 087.6412	300.5057
C34	CC 47PF+-2%5X6NP0 CAPACITOR VALVO 2222 678 10479	CC 087.6506	300.5057
C35	CC 4,7NF+-10%6X9R2000 CAPACITOR VALVO 2222 63051 472	CC 087.7102	300.5057

uns alle Rechte vor

Kennzeichen Component No.	Benennung/Beschreibung Designation	Sachnummer Stock No.	enthalten in contained in
C36	CE 47UF -10+100%40V 11X13 ELECTROLYTIC CAPACITOR SIEMENS B41316-B7476-Z	022.7589	300.5057
C37	CE 47UF -10+100%40V 11X13 ELECTROLYTIC CAPACITOR SIEMENS B41316-B7476-Z	022.7589	300.5057
C38	CC 100NF+-10%50V5K1200VIE CAPACITOR UNION CARB CK05BX104K	CC 084.5350	300.5057
C39	CC 100NF+-10%50V5K1200VIE CAPACITOR UNION CARB CK05BX104K	CC 084.5350	300.5057
C40	CC 4,7NF+-10%6X9R2000 CAPACITOR VALVO 2222 63051 472	CC 087.7102	300.5057
C41	CC 4,7NF+-10%6X9R2000 CAPACITOR VALVO 2222 63051 472	CC 087.7102	300.5057
C42	CC 22PF+-2%4X5NP0 CAPACITOR VALVO 2222 678 10229	CC 087.6464	300.5057
C43	CC 4,7NF+-10%6X9R2000 CAPACITOR VALVO 2222 63051 472	CC 087.7102	300.5057
C44	CC 4,7NF+-10%6X9R2000 CAPACITOR VALVO 2222 63051 472	CC 087.7102	300.5057
C45	CC 4,7NF+-10%6X9R2000 CAPACITOR VALVO 2222 63051 472	CC 087.7102	300.5057
C46	CC 10NF-20+50%7X8R6000 CAPACITOR VALVO 2222 63051 64051103	CC 087.7525	300.5057
C47	CC 10NF-20+50%7X8R6000 CAPACITOR VALVO 2222 63051 64051103	CC 087.7525	300.5057
C48	CC 10NF-20+50%7X8R6000 CAPACITOR VALVO 2222 63051 64051103	CC 087.7525	300.5057
C49	CC 10NF-20+50%7X8R6000 CAPACITOR VALVO 2222 63051 64051103	CC 087.7525	300.5057
C50	CC 10NF-20+50%7X8R6000 CAPACITOR VALVO 2222 63051 64051103	CC 087.7525	300.5057
C51	CC 10NF-20+50%7X8R6000 CAPACITOR VALVO 2222 63051 64051103	CC 087.7525	300.5057
C52	CC 100NF+-10%50V5K1200VIE CAPACITOR UNION CARB CK05BX104K	CC 084.5350	300.5057
C54	CC 10NF-20+50%7X8R6000 CAPACITOR VALVO 2222 63051 64051103	CC 087.7525	300.5057
C55	CC 10NF-20+50%7X8R6000 CAPACITOR VALVO 2222 63051 64051103	CC 087.7525	300.5057

Für diese Unterlage behalten wir uns alle Rechte vor

Kennzeichen Component No.	Benennung/Beschreibung Designation	Sachnummer Stock No.	enthalten in contained in
C56	CE 47UF -10+100%40V 11X13 ELECTROLYTIC CAPACITOR SIEMENS B41316-B7476-Z	022.7589	300.5057
C57	CC 1,5NF+-10%4X5R2000 CAPACITOR VALVO 2222 63051 152	CC 087.7048	300.5057
C58	CC 680PF+-10%4X5R2000 CAPACITOR VALVO 2222 63051 681	CC 087.7019	300.5057
C59	CC 15PF+-2%3X4NP0 CAPACITOR VALVO 2222 678 10159	CC 087.6441	300.5057
C60	CC 1NF+-10%63V K2000 CERAMIC CAPACITOR VALVO 2222 63051 102	CC 022.0784	300.5057
C61	CC 4,7NF+-10%6X9R2000 CAPACITOR VALVO 2222 63051 472	CC 087.7102	300.5057
C62	CC 4,7NF+-10%6X9R2000 CAPACITOR VALVO 2222 63051 472	CC 087.7102	300.5057
C63	CC 10NF-20+50%7X8R6000 CAPACITOR VALVO 2222 63051 64051103	CC 087.7525	300.5057
C64	CC 10NF-20+50%7X8R6000 CAPACITOR VALVO 2222 63051 64051103	CC 087.7525	300.5057
C65	CK 1UF+-10%50V5RM MKT CAPACITOR WIMA MKS2/50/1UF/10%	CK 099.2998	300.5057
C66	CE 22 UF+-20% 6V 7X 4X 8 ELECTROLYTIC CAPACITOR ERO-TANTAL TA-ELKO,ETR2-22/6	CE 022.8033	300.5057
C67	CC 100NF+-10%50V5K1200VIE CAPACITOR UNION CARB CK05BX104K	CC 084.5350	300.5057
C68	CC 100NF+-10%50V5K1200VIE CAPACITOR UNION CARB CK05BX104K	CC 084.5350	300.5057
C69	CK 1UF+-10%50V5RM MKT. CAPACITOR WIMA MKS2/50/1UF/10%	CK 099.2998	300.5057
C70	CK 33NF+-5%63V5RM MKT CAPACITOR WIMA MKS2/63/0,033UF/5%	CK 099.2900	300.5057
C71	CK 470NF+-5%63V5RM MKT CAPACITOR WIMA MKS2/63/0,47UF/5%	CK 099.2975	300.5057
C72	CC 10NF-20+50%7X8R6000 CAPACITOR VALVO 2222 63051 64051103	CC 087.7525	300.5057
C73	CC 10NF-20+50%7X8R6000 CAPACITOR VALVO 2222 63051 64051103	CC 087.7525	300.5057
C74	CC 10NF-20+50%7X8R6000 CAPACITOR VALVO 2222 63051 64051103	CC 087.7525	300.5057

uns alle Rechte vor

Kennzeichen Component No.	Benennung/Beschreibung Designation	Sachnummer Stock No.	enthalten in contained in
C75	CE 47UF -10+100%40V 11X13 ELECTROLYTIC CAPACITOR SIEMENS B41316-B7476-Z	022.7589	300.5057
C76	CC 1NF+-10%63V K2000 CERAMIC CAPACITOR VALVO 2222 63051 102	CC 022.0784	300.5057
C77	CK 1UF+-10%50V5RM MKT CAPACITOR WIMA MKS2/50/1UF/10%	CK 099.2998	300.5057
C78	CE 47UF -10+100%40V 11X13 ELECTROLYTIC CAPACITOR SIEMENS B41316-B7476-Z	022.7589	300.5057
C79	CC 82PF+-2%6X7NP0 CAPACITOR VALVO 2222 678 10829	CC 087.6535	300.5057
C82	CC 10NF-20+50%7X8R6000 CAPACITOR VALVO 2222 63051 64051103	CC 087.7525	300.5057
C84	CC 1NF+-10%63V K2000 CERAMIC CAPACITOR VALVO 2222 63051 102	CC 022.0784	300.5057
C85	CK 1UF+-10%50V5RM MKT CAPACITOR WIMA MKS2/50/1UF/10%	CK 099.2998	300.5057
C86	CK 1UF+-10%50V5RM MKT CAPACITOR WIMA MKS2/50/1UF/10%	CK 099.2998	300.5057
C87	CC 150PF+-2%5X6N750 CAPACITOR VALVO 2222 678 58151	CC 087.6929	300.5057
C88	CC 150PF+-2%5X6N750 CAPACITOR VALVO 2222 678 58151	CC 087.6929	300.5057
C89	CC 1NF+-10%63V K2000 CERAMIC CAPACITOR VALVO 2222 63051 102	CC 022.0784	300.5057
C90	CC 150PF+-2%5X6N750 CAPACITOR VALVO 2222 678 58151	CC 087.6929	300.5057
C91	CC 10NF-20+50%7X8R6000 CAPACITOR VALVO 2222 63051 64051103	CC 087.7525	300.5057
C92	CE 47UF -10+100%40V 11X13 ELECTROLYTIC CAPACITOR SIEMENS B41316-B7476-Z	022.7589	300.5057
C93	CC 100NF+-10%50V5K1200VIE CAPACITOR UNION CARB CK05BX104K	CC 084.5350	300.5057
C94	CC 10NF-20+50%7X8R6000 CAPACITOR VALVO 2222 63051 64051103	CC 087.7525	300.5057
C96	CC 100NF+-10%50V5K1200VIE CAPACITOR UNION CARB CK05BX104K	CC 084.5350	300.5057
C97	CC 100NF+-10%50V5K1200VIE CAPACITOR UNION CARB CK05BX104K	CC 084.5350	300.5057

Für diese Unterlage behalten wir uns alle Rechte vor

Kennzeichen Component No.	Benennung/Beschreibung Designation	Sachnummer Stock No.	enthalten in contained in
C100	CC 10NF-20+50%7X8R6000 CAPACITOR VALVO 2222 63051 64051103	CC 087.7525	300.5057
C101	CC 100NF+-10%50V5K1200VIE CAPACITOR UNION CARB CK05BX104K	CC 084.5350	300.5057
C103	CC 10NF-20+50%7X8R6000 CAPACITOR VALVO 2222 63051 64051103	CC 087.7525	300.5057
C110	CT 9PF 250V LUFTTR.KONZ. AIR TRIMMER TEKELEC AT 5276	564.6885	300.5057
C111	CC 27 PF 2% NP0/IA 3 ROHR CERAMIC CAPACITOR DRALORIC NP0/IA27/2RD3X12LC	022.2341	300.5057
C112	CC 10NF-20+50%7X8R6000 CAPACITOR VALVO 2222 63051 64051103	CC 087.7525	300.5057
C113	CC 18 PF+-2% NP0/IA3ROHR CERAMIC CAPACITOR DRALORIC NP0/IA18/2RD3X10LC	022.2329	300.5057
C114	CC 3,3PF+-0,25PF5NP0 CAPACITOR STETTNER SDPL5;3,3PF/0,25NP0	450.6912	300.5057
C115	CC 10NF-20+50%7X8R6000 CAPACITOR VALVO 2222 63051 64051103	CC 087.7525	300.5057
C116	CK 1UF+-10%50V5RM MKT CAPACITOR WIMA MKS2/50/1UF/10%	CK 099.2998	300.5057
C117	CC 150PF+-2%5X6N750 CAPACITOR VALVO 2222 678 58151	CC 087.6929	300.5057
C118	CC 100PF 1% N470/IA 3ROHR CERAMIC CAPACITOR DRALORIC N47/IA100/1RD3X16LC	022.3090	300.5057
C119	CC 68PF 1% N470/IA 3ROHR CERAMIC CAPACITOR DRALORIC N470/IA68/1RD3X12LC	022.3077	300.5057
C121	CE 47UF -10+100%40V 11X13 ELECTROLYTIC CAPACITOR SIEMENS B41316-B7476-Z	022.7589	300.5057
C122	CC 4,7NF+-10%6X9R2000 CAPACITOR VALVO 2222 63051 472	CC 087.7102	300.5057
C123	CC 4,7PF+-0,25PF3X4NP0 CAPACITOR VALVO 2222 678 09478	CC 087.6387	300.5057
C124	CT 13PF TAUCHTR.RD7X12 AIR-TYPE TRIMMER	CT 092.4266	300.5057
D1	LD 35DB/200M-10GHZ PI-FIL CHOKE ERIE 1214-038	LD 300.6818	300.5070
BIS/TO			

uns alle Rechte vor

Kennzeichen Component No.	Benennung/Beschreibung Designation	Sachnummer Stock No.	enthalten in contained in
D7			
D10	LD 35DB/200M-10GHZ PI-FIL CHOKE ERIE 1214-038	LD 300.6818	300.5070
BIS/TO			
D17			
GL7	AE 5082-2800 SCHOTTKYDI DIODE HEWLETT-P. 5082-2800	AE 012.9066	300.5057
GL8	AE 5082-2800 SCHOTTKYDI DIODE HEWLETT-P. 5082-2800	AE 012.9066	300.5057
GL9	AD 1N4448 75V 0,15A UDI DIODE VALVO 1N4448	AD 012.0700	300.5057
GL10	AE 1N827 6,2V REF.DI REFERENCE DIODE CDI 1N827	AE 418.0029	300.5057
GL11	AD 1N4448 75V 0,15A UDI DIODE VALVO 1N4448	AD 012.0700	300.5057
GL12	AD 1N4448 75V 0,15A UDI DIODE VALVO 1N4448	AD 012.0700	300.5057
GL13	AD 1N4448 75V 0,15A UDI DIODE VALVO 1N4448	AD 012.0700	300.5057
GL14	AD 1N4448 75V 0,15A UDI DIODE VALVO 1N4448	AD 012.0700	300.5057
GL20	AE BB312 SELEKT. TUNING DIODE	356.0715	300.5057
GL21	AE BB405B 11/ 2PF CDI TUNING DIODE VALVO BB405B	AE 596.6839	300.5057
K1	DX KABEL CABLE	356.0596	300.5057
K2	DX KABEL CABLE	356.0609	300.5057
L2	LD 10,0UH10%3,300HM0,144A CHOKE DELEVAN DROSSEL1025-44	LD 026.4184	300.5057
L10	LD 0,82UH10%0,850HM0,420A CHOKE DELEVAN DROSSEL1025-18	LD 067.2857	300.5057
L11	LD 0,22UH10%0,140HM1,045A CHOKE DELEVAN DROSSEL1025-04	LD 067.2786	300.5057
L12	LD 10,0UH10%3,300HM0,144A CHOKE DELEVAN DROSSEL1025-44	LD 026.4184	300.5057
L20	LD 10,0UH10%3,300HM0,144A CHOKE DELEVAN DROSSEL1025-44	LD 026.4184	300.5057

Für diese Unterlage behalten wir uns alle Rechte vor

Kennzeichen Component No.	Benennung/Beschreibung Designation	Sachnummer Stock No.	enthalten in contained in
L21	LK 0,7UH SPULE COIL	356.0509	300.5057
L22	LD 10,0UH10%3,300HM0,144A CHOKE DELEVAN DROSSEL1025-44	LD 026.4184	300.5057
L24	LD 33,0UH10%3,400HM0,130A CHOKE DELEVAN DROSSEL 1025-56	LD 067.3047	300.5057
L25	LD 0,56UH10%0,500HM0,550A CHOKE DELEVAN DROSSEL1025-14	LD 067.2834	300.5057
L26	LD 33,0UH10%3,400HM0,130A CHOKE DELEVAN DROSSEL 1025-56	LD 067.3047	300.5057
L27	LD 10,0UH10%3,300HM0,144A CHOKE DELEVAN DROSSEL1025-44	LD 026.4184	300.5057
MP1	VL WIRE-WRAP PIN BERG NR. 75 403-001	VL 088.4507	300.5057
BIS/TO MP8			
MP10	VL WIRE-WRAP PIN BERG NR. 75 403-001	VL 088.4507	300.5057
MP11	VL WIRE-WRAP PIN BERG NR. 75 403-001	VL 088.4507	300.5057
MP12	VL WIRE-WRAP PIN BERG NR. 75 403-001	VL 088.4507	300.5057
MP14	FP INDIREKT.STECKERL.36P. PIN CONNECTOR BERG 75160-102-36	FP 242.3600	300.5057
MP15	FP INDIREKT.STECKERL.36P. PIN CONNECTOR BERG 75160-102-36	FP 242.3600	300.5057
R1	RL 0,35W 10,0 OHM+-1%TK50 RESISTOR DRALORIC SMA0207/10OHM-F-D	RL 082.8852	300.5057
R2	RL 0,35W 475 KOHM+-1%TK50 RESISTOR DRALORIC SMA/207/475K-F-C	RL 083.2593	300.5057
R3	RL 0,35W 15,0KOHM+-1%TK50 RESISTOR DRALORIC SMA0207/15K-F-D	RL 083.1400	300.5057
R4	RL 0,35W4,22KOHM+-0,1%T25 RESISTOR	RL 084.2345	300.5057
R5	RL 0,35W 3,01KOHM+-1%TK50 RESISTOR DRALORIC SMA0207/3,01K-F-D	RL 083.0961	300.5057
R6	RL 0,35W2,26KOHM+-0,1%T25 RESISTOR	RL 083.9823	300.5057
R8	RL 0,35W562 OHM+-0,1%TK25 RESISTOR DRALORIC SMA/207/562/HM-B-E	RL 083.8662	300.5057
R9	RL 0,35W 1MOHM+-1%TK50 RESISTOR DRALORIC SMA0207/1M-F-D	RL 082.7862	300.5057

uns alle Rechte vor

Kennzeichen Component No.	Benennung/Beschreibung Designation	Sachnummer Stock No.	enthalten in contained in
R10	RL 0,35W 1KOHM+-1%TK50 RESISTOR DRALORIC SMA0207/1K-F-C	RL 082.2160	300.5057
R11	RL 0,35W 10,0KOHM+-1%TK50 RESISTOR DRALORIC SMA0207/10K-F-D	RL 083.1297	300.5057
R14	RL 0,35W2KOHM+-0,1%TK25 RESISTOR DRALORIC SMA0207/2,00K-B-E	RL 083.9723	300.5057
R15	RL 0,35W2KOHM+-0,1%TK25 RESISTOR DRALORIC SMA0207/2,00K-B-E	RL 083.9723	300.5057
R16	RL 0,35W2KOHM+-0,1%TK25 RESISTOR DRALORIC SMA0207/2,00K-B-E	RL 083.9723	300.5057
R17	RL 0,35W2KOHM+-0,1%TK25 RESISTOR DRALORIC SMA0207/2,00K-B-E	RL 083.9723	300.5057
R18	RL 0,35W2KOHM+-0,1%TK25 RESISTOR DRALORIC SMA0207/2,00K-B-E	RL 083.9723	300.5057
R19	RL 0,35W100 OHM+-0,1%TK25 RESISTOR DRALORIC SMA0207/100OHM-B-E	RL 083.7220	300.5057
R20	RL 0,35W1,40KOHM+-0,1%T25 RESISTOR DRALORIC SMA0207/1,40K-B-E	RL 083.9423	300.5057
R21	RL 0,35W1,40KOHM+-0,1%T25 RESISTOR DRALORIC SMA0207/1,40K-B-E	RL 083.9423	300.5057
R22	RL 0,35W11,1KOHM+-0,1%T25 RESISTOR DRALORIC SMA0207/11,1K-B-E	RL 084.3158	300.5057
R23	RL 0,35W11,3KOHM+-0,1%T25 RESISTOR DRALORIC SMA0207/11,3K-B-E	RL 084.3164	300.5057
R26	RL 0,35W4,70KOHM+-0,1%T25 RESISTOR DRALORIC SMA0207/4,70K-B-E	RL 084.2439	300.5057
R27	RL 0,35W 5,62KOHM+-1%TK50 RESISTOR DRALORIC SMA0207/5,62K-F-C	RL 082.2190	300.5057
R28	RL 0,35W499 OHM+-0,1%TK25 RESISTOR DRALORIC SMA/207/499OHM-B-E	RL 083.8562	300.5057
R29	RL 0,35W4,70KOHM+-0,1%T25 RESISTOR DRALORIC SMA0207/4,70K-B-E	RL 084.2439	300.5057
R30	RL 0,35W10,5KOHM+-0,1%T25 RESISTOR DRALORIC SMA0207/10,5K-B-E	RL 084.3106	300.5057
R31	RS 0,5W5KOHM+-10%10X10X5 CERMET POTENTIOMETER BOURNS 3386X-1-502	RS 247.7978	300.5057
R32	RL 0,35W 4,12KOHM+-1%TK50 RESISTOR DRALORIC SMA0207/4,12K-F-D	RL 083.1051	300.5057

Für diese Unterlage behalten wir uns alle Rechte vor

Kennzeichen Component No.	Benennung/Beschreibung Designation	Sachnummer Stock No.	enthalten in contained in
R33	RL 0,35W3,40KOHM+-0,1%T25 RESISTOR DRALORIC SMA0207/3,40K-B-E	RL 084.2168	300.5057
R34	RL 0,35W 221 OHM+-1%TK50 RESISTOR DRALORIC SMA0207/2210HM-F-D	RL 083.0084	300.5057
R35	RL 0,35W4,99KOHM+-0,1%T25 RESISTOR DRALORIC SMA0207/4,99K-B-E	RL 084.2480	300.5057
R36	RL 0,35W20,5KOHM+-0,1%T25 RESISTOR DRALORIC SMA0207/20,5K-B-E	RL 084.3664	300.5057
R37	RL 0,35W 47,5KOHM+-1%TK50 RESISTOR DRALORIC SMA/207/47,5K-F-C	RL 083.1800	300.5057
R38	RL 0,35W3,24KOHM+-0,1%T25 RESISTOR DRALORIC 0207 3,24KOHM 0,1%	RL 084.2122	300.5057
R39	RL 0,35W1,62KOHM+-0,1%T25 RESISTOR DRALORIC 0207 1,62KOHM 0,1%	RL 083.9546	300.5057
R42	RL 0,35W 100KOHM+-1%TK50 RESISTOR DRALORIC SMA0207/100K-F-C	RL 082.1764	300.5057
R43	RL 0,35W 332 KOHM+-1%TK50 RESISTOR DRALORIC SMA0207/332K-F-C	RL 083.2441	300.5057
R44	RL 0,35W 82,5KOHM+-1%TK50 RESISTOR DRALORIC SMA0207/82,5K-F-C	RL 082.2302	300.5057
R45	RS 0,5W1KOHM+-10%10X10X5 CERMET POTENTIOMETER T BOURNS 3386F-1-102	RS 087.7560	300.5057
R46	RL 0,35W 82,5KOHM+-1%TK50 RESISTOR DRALORIC SMA0207/82,5K-F-C	RL 082.2302	300.5057
R47	RL 0,35W 221 OHM+-1%TK50 RESISTOR DRALORIC SMA0207/2210HM-F-D	RL 083.0084	300.5057
R48	RL 0,35W 221 OHM+-1%TK50 RESISTOR DRALORIC SMA0207/2210HM-F-D	RL 083.0084	300.5057
R49	RL 0,35W 182 KOHM+-1%TK50 RESISTOR DRALORIC SMA0207/182K-F-C	RL 083.2193	300.5057
R50	RL 0,35W 221 OHM+-1%TK50 RESISTOR DRALORIC SMA0207/2210HM-F-D	RL 083.0084	300.5057
R51	RL 0,35W 121KOHM+-1%TK50 RESISTOR DRALORIC SMA/207/121K-F-C	RL 083.2070	300.5057
R52	RL 0,35W 82,5KOHM+-1%TK50 RESISTOR DRALORIC SMA0207/82,5K-F-C	RL 082.2302	300.5057
R53	RL 0,35W 221 OHM+-1%TK50 RESISTOR DRALORIC SMA0207/2210HM-F-D	RL 083.0084	300.5057

uns alle Rechte vor

Kennzeichen Component No.	Benennung/Beschreibung Designation	Sachnummer Stock No.	enthalten in contained in
R54	RL 0,35W 274 OHM+-1%TK50 RESISTOR DRALORIC SMA0207/2740HM-F-D	RL 083.0178	300.5057
R55	RL 0,35W 681 OHM+-1%TK50 RESISTOR DRALORIC SMA0207/6810HM-F-D	RL 083.0490	300.5057
R56	RL 0,35W 33,2 OHM+-1%TK50 RESISTOR DRALORIC SMA0207/33,20HM-F-D	RL 082.9359	300.5057
R57	RL 0,35W 82,5 OHM+-1%TK50 RESISTOR DRALORIC SMA0207/82,50HM-F-D	RL 082.9707	300.5057
R58	RL 0,35W 681 OHM+-1%TK50 RESISTOR DRALORIC SMA0207/6810HM-F-D	RL 083.0490	300.5057
R59	RL 0,35W 130 OHM+-1%TK50 RESISTOR DRALORIC SMA0207/1300HM-F-D	RL 082.9888	300.5057
R60	RL 0,35W 562 OHM+-1%TK50 RESISTOR DRALORIC SMA0207/5620HM-F-D	RL 083.0461	300.5057
R61	RL 0,35W 274 OHM+-1%TK50 RESISTOR DRALORIC SMA0207/2740HM-F-D	RL 083.0178	300.5057
R62	RL 0,35W 33,2 OHM+-1%TK50 RESISTOR DRALORIC SMA0207/33,20HM-F-D	RL 082.9359	300.5057
R63	RL 0,35W 681 OHM+-1%TK50 RESISTOR DRALORIC SMA0207/6810HM-F-D	RL 083.0490	300.5057
R64	RL 0,35W 82,5 OHM+-1%TK50 RESISTOR DRALORIC SMA0207/82,50HM-F-D	RL 082.9707	300.5057
R65	RL 0,35W 604 OHM+-1%TK50 RESISTOR DRALORIC SMA/207/6040HM-F-C	RL 082.2425	300.5057
R66	RL 0,35W 698 OHM+-1%TK50 RESISTOR DRALORIC SMA0207/6980HM-F-D	RL 083.0503	300.5057
R67	RL 0,35W 1KOHM+-1%TK50 RESISTOR DRALORIC SMA0207/1K-F-C	RL 082.2160	300.5057
R68	RL 0,35W 15,0KOHM+-1%TK50 RESISTOR DRALORIC SMA0207/15K-F-D	RL 083.1400	300.5057
R70	RL 0,35W 825 KOHM+-1%TK50 RESISTOR DRALORIC SMA0207/825K-F-C	RL 083.2812	300.5057
R71	RL 0,35W 825 OHM+-1%TK50 RESISTOR DRALORIC SMA 0207/8250HM-F-C	RL 082.2502	300.5057
R72	RL 0,35W 33,2KOHM+-1%TK50 RESISTOR DRALORIC SMA0207/33,2K-F-C	RL 083.1674	300.5057
R73	RL 0,35W 33,2KOHM+-1%TK50 RESISTOR DRALORIC SMA0207/33,2K-F-C	RL 083.1674	300.5057

Für diese Unterlage behalten wir uns alle Rechte vor

Kennzeichen Component No.	Benennung/Beschreibung Designation	Sachnummer Stock No.	enthalten in contained in
R74	RL 0,35W 825 OHM+-1%TK50 RESISTOR DRALORIC SMA 0207/825OHM-F-C	RL 082.2502	300.5057
R75	RL 0,35W 6,81KOHM+-1%TK50 RESISTOR DRALORIC SMA 0207/6,81K-F-C	RL 082.2560	300.5057
R76	RL 0,35W 332 KOHM+-1%TK50 RESISTOR DRALORIC SMA0207/332K-F-C	RL 083.2441	300.5057
R77	RL 0,35W 8,25KOHM+-1%TK50 RESISTOR DRALORIC SMA0207/8,25K-F-D	RL 083.1239	300.5057
R78	RL 0,35W 1KOHM+-1%TK50 RESISTOR DRALORIC SMA0207/1K-F-C	RL 082.2160	300.5057
R79	RL 0,35W 100 OHM+-1%TK50 DEPOS.-CARBON RESISTOR DRALORIC SMA0207/100/HM-F-D	RL 082.6543	300.5057
R80	RL 0,35W 22,1KOHM+-1%TK50 RESISTOR DRALORIC SMA/207/22,1K-F-C	RL 083.1545	300.5057
R81	RL 0,35W 2,21KOHM+-1%TK50 RESISTOR DRALORIC SMA 0207/2,21K-F-C	RL 082.2477	300.5057
R82	RL 0,35W 33,2KOHM+-1%TK50 RESISTOR DRALORIC SMA0207/33,2K-F-C	RL 083.1674	300.5057
R83	RL 0,35W 1KOHM+-1%TK50 RESISTOR DRALORIC SMA0207/1K-F-C	RL 082.2160	300.5057
R84	RL 0,35W 2,49KOHM+-1%TK50 RESISTOR DRALORIC SMA0207/2,49K-F-D	RL 083.0890	300.5057
R85	RL 0,35W 9,53KOHM+-1%TK50 RESISTOR DRALORIC SMA0207/9,53K-F-C	RL 082.1735	300.5057
R86	RL 0,35W 2,00KOHM+-1%TK50 RESISTOR DRALORIC SMA0207/2,00K-F-D	RL 083.0826	300.5057
R91	RL 0,35W 3,32KOHM+-1%TK50 RESISTOR DRALORIC SMA0207/3,32K-F-D	RL 083.0990	300.5057
R92	RS 0,5W100KOHM+-10%10X10X CERMET POTENTIOMETER T BOURNS 3386F 100KOHM	RS 087.7583	300.5057
R93	RL 0,35W 562 OHM+-1%TK50 RESISTOR DRALORIC SMA0207/5620HM-F-D	RL 083.0461	300.5057
R94	RL 0,35W 562 OHM+-1%TK50 RESISTOR DRALORIC SMA0207/5620HM-F-D	RL 083.0461	300.5057
R95	RL 0,35W 7,50KOHM+-1%TK50 RESISTOR DRALORIC SMA0207/7,5K-F-D	RL 083.1197	300.5057
R96	RL 0,35W 11,5KOHM+-1%TK50 RESISTOR DRALORIC SMA0207/11,5K-F-D	RL 083.1339	300.5057

uns alle Rechte vor

Kennzeichen Component No.	Benennung/Beschreibung Designation	Sachnummer Stock No.	enthalten in contained in
R97	RL 0-WIDERSTAND DIN 0204 0-OHM RESISTOR DRALORIC OMA 0204	RL 069.0000	300.5057
R99	RL 0,35W3,09KOHM+-0,1%T25 RESISTOR DRALORIC 0207 3,09KOHM 0,1%	RL 084.2080	300.5057
R100	RL 0,35W4,99KOHM+-0,1%T25 RESISTOR DRALORIC SMA0207/4,99K-B-E	RL 084.2480	300.5057
R101	RL 0,35W715 OHM+-0,1%TK25 RESISTOR DRALORIC 0207 715 OHM 0,1%	RL 083.8862	300.5057
R102	RL 0,35W10,0KOHM+-0,1%T25 RESISTOR DRALORIC SMA0207/10K-B-E	RL 084.3064	300.5057
R103	RL 0,35W 33,2KOHM+-1%TK50 RESISTOR DRALORIC SMA0207/33,2K-F-C	RL 083.1674	300.5057
R104	RL 0,35W11,5KOHM+-0,1%T25 RESISTOR DRALORIC 0207 11,5KOHM 0,1%	RL 084.3187	300.5057
R105	RS 0,75W10KOHM+-10%CERMET DEPOS.-CARBON POTENTIOMET BOURNS 3006P-1-10 KOHM+-10%	RS 037.7396	300.5057
R106	RL 0,35W 10,0KOHM+-1%TK50 RESISTOR DRALORIC SMA0207/10K-F-D	RL 083.1297	300.5057
R107	RL 0,35W 1,05KOHM+-1%TK50 RESISTOR DRALORIC SMA0207/1,05K-F-D	RL 083.0626	300.5057
R108	RL 0,35W11,0KOHM+-0,1%T25 RESISTOR DRALORIC SMA0207/11K-B-E	RL 084.3141	300.5057
R109	RL 0,35W 10,0KOHM+-1%TK50 RESISTOR DRALORIC SMA0207/10K-F-D	RL 083.1297	300.5057
R110	RL 0,35W 1KOHM+-1%TK50 RESISTOR DRALORIC SMA0207/1K-F-C	RL 082.2160	300.5057
R120	RL 0,35W 2,74KOHM+-1%TK50 RESISTOR DRALORIC SMA0207/2,74K-F-D	RL 083.0926	300.5057
R121	RL 0,35W 243 KOHM+-1%TK50 RESISTOR DRALORIC SMA0207/243K-F-C	RL 083.2312	300.5057
R122	RL 0,35W 2,74KOHM+-1%TK50 RESISTOR DRALORIC SMA0207/2,74K-F-D	RL 083.0926	300.5057
R123	RL 0,35W 2,74KOHM+-1%TK50 RESISTOR DRALORIC SMA0207/2,74K-F-D	RL 083.0926	300.5057
R124	RL 0,35W 681 OHM+-1%TK50 RESISTOR DRALORIC SMA0207/6810HM-F-D	RL 083.0490	300.5057
R130	RL 0,35W 10,0KOHM+-1%TK50 RESISTOR DRALORIC SMA0207/10K-F-D	RL 083.1297	300.5057

Für diese Unterlage behalten wir uns alle Rechte vor

Kennzeichen Component No.	Benennung/Beschreibung Designation	Sachnummer Stock No.	enthalten in contained in
R131	RL 0,35W 10,0KOHM+-1%TK50 RESISTOR DRALORIC SMA0207/10K-F-D	RL 083.1297	300.5057
R133	RL 0,35W 5,62KOHM+-1%TK50 RESISTOR DRALORIC SMA0207/5,62K-F-C	RL 082.2190	300.5057
R134	RL 0,35W 332 OHM+-1%TK50 RESISTOR DRALORIC SMA0207/3320HM-F-D	RL 083.0255	300.5057
R135	RL 0,35W 332 OHM+-1%TK50 RESISTOR DRALORIC SMA0207/3320HM-F-D	RL 083.0255	300.5057
R136	RL 0,35W 121 OHM+-1%TK50 RESISTOR DRALORIC SMA0207/1210HM-F-D	RL 082.9859	300.5057
R137	RL 0,35W 475 OHM+-1%TK50 RESISTOR DRALORIC SMA0207/4750HM-F-D	RL 083.0390	300.5057
R140	RL 0,35W 1KOHM+-1%TK50 RESISTOR DRALORIC SMA0207/1K-F-C	RL 082.2160	300.5057
R141	RL 0,35W 15,0KOHM+-1%TK50 RESISTOR DRALORIC SMA0207/15K-F-D	RL 083.1400	300.5057
R142	RL 0,35W 1KOHM+-1%TK50 RESISTOR DRALORIC SMA0207/1K-F-C	RL 082.2160	300.5057
R143	RL 0,35W 15,0KOHM+-1%TK50 RESISTOR DRALORIC SMA0207/15K-F-D	RL 083.1400	300.5057
RS1	SR 5V 1XA DIL M.DIODE U.S RELAY SIEMENS V23100-V4005-A011	SR 282.4994	300.5057
ST1	FP EINZELKONTAKTSTIFT SINGLE-CONTACT PIN ULMIC R&S.ZCHNG.300.8804	300.8804	300.5070
BIS/TO ST7			
ST10	FP EINZELKONTAKTSTIFT SINGLE-CONTACT PIN ULMIC R&S.ZCHNG.300.8804	300.8804	300.5070
BIS/TO ST17			
ST50	ENTHALTEN IN/INCLUDED IN LEITERPLATTE/PCB		300.5070
T1	AK BCY59IX NPN 45V 200MA TRANSISTOR SIEMENS BCY59IX	AK 010.5163	300.5057
T3	AK BCY59IX NPN 45V 200MA TRANSISTOR SIEMENS BCY59IX	AK 010.5163	300.5057
T9	AM U310 NKAN 25V FET FET SILICONIX U310	AM 454.6217	300.5057

uns alle Rechte vor

Kennzeichen/Component No.	Benennung/Beschreibung/Designation	Sachnummer/Stock No.	enthalten in/contained in
T10	AM U310 NKAN 25V FET FET SILICONIX U310	AM 454.6217	300.5057
T11	AM 3N204 N-DUAL-G.MOSF MOS-FET RCA 3N204	AM 204.1910	300.5057
T12	AM 3N204 N-DUAL-G.MOSF MOS-FET RCA 3N204	AM 204.1910	300.5057
T13	AK BSX29 PNP 12V 200MA TRANSISTOR SGS BSX29	AK 010.3031	300.5057
T15	AK BSX29 PNP 12V 200MA TRANSISTOR SGS BSX29	AK 010.3031	300.5057
T17	AK BCY59IX NPN 45V 200MA TRANSISTOR SIEMENS BCY59IX	AK 010.5163	300.5057
T20	AK BCY59IX NPN 45V 200MA TRANSISTOR SIEMENS BCY59IX	AK 010.5163	300.5057
T21	AK BCY59IX NPN 45V 200MA TRANSISTOR SIEMENS BCY59IX	AK 010.5163	300.5057
T22	AK BCY59IX NPN 45V 200MA TRANSISTOR SIEMENS BCY59IX	AK 010.5163	300.5057
			- ENDE -

Für diese Unterlage behalten wir uns alle Rechte vor

095.0026 - 0185

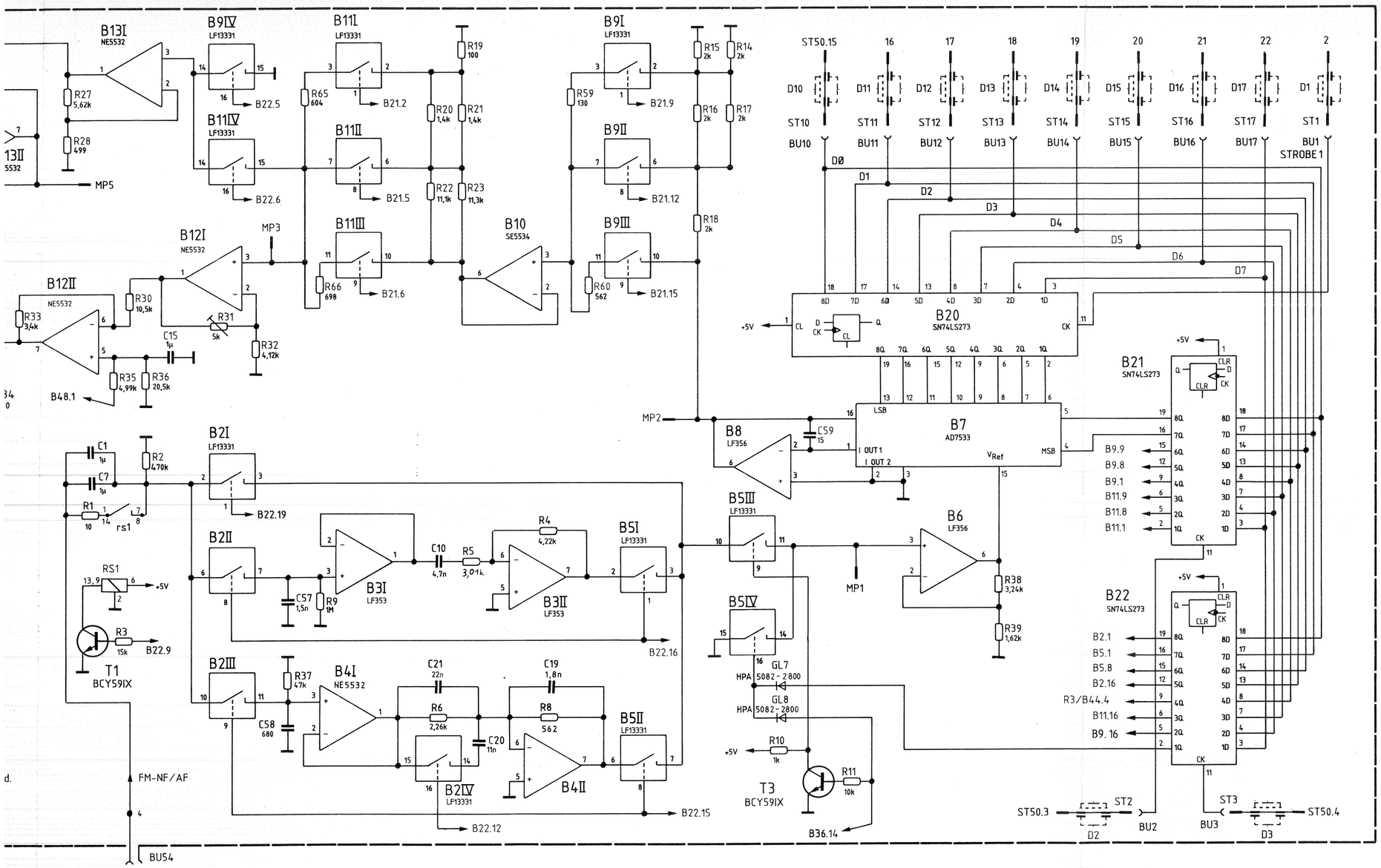

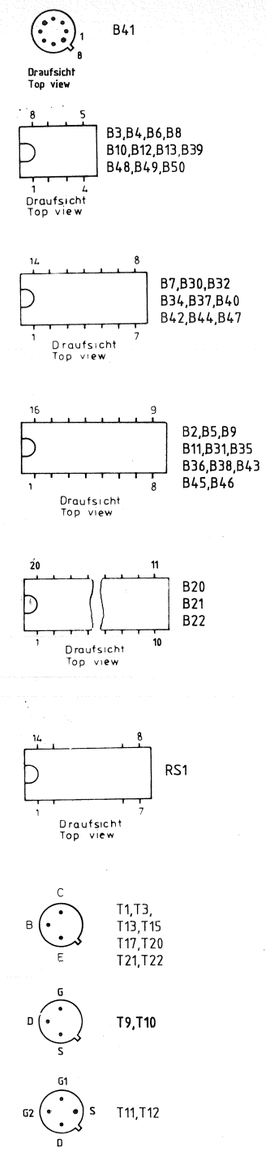

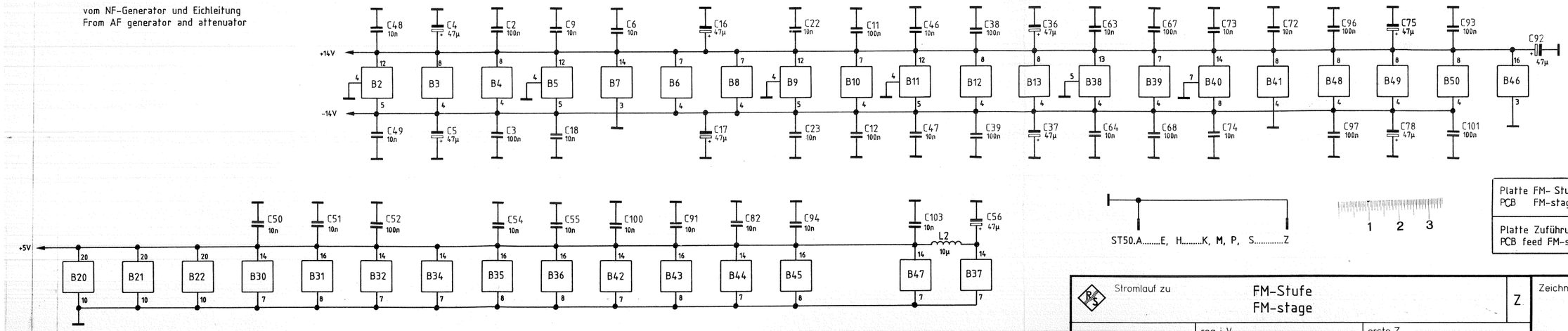

Platte FM- Stufe PCB FM-stage	300.5057
Platte Zuführung FM-Stufe PCB feed FM-stage	300.5070

Stromlauf zu FM-Stufe FM-stage	Z	Zeichn.-Nr. 300.7014 S	Blatt-Nr.
reg. i. V 300.1000 V	erste Z. 300.1000		v. Bl.

Für diese Zeichnung behalten wir uns alle Rechte vor.
ROHDE&SCHWARZ

	Name	Datum	And Mittlg Nr	And-Zust
	GS	22.1.86	32942	L

	Name	Datum	And Mittlg Nr	And-Zust
	LS	7.82		F
	LS	10.82	27860	G
	gs	4.83	30063	H
	Gs	6.85	32288	J
	Hö	12.85	32942	K

Zeichn.-Nr. 300.7014 S		Name	Datum
	IKGA		
	gezeichnet	gu	7.82
	bearbeitet	ls	7.82
	geprüft		
	normgepr.		

C115 10n · GL21 BB405 · R130 10k · C121 47µ · C114 3,3 · C117 150 · GL20 BB312 · C110 1–10 · C122 4,7n · L24 33µ · L20 10µ · L22 10µ · C111 27 · L21 0,7µ · R131 10k · T9 U310 · +14V · K1 · R134 330 · R135 330 · C113 18 · C124 1–14 · C118 100 · C116 1µ · C112 10n · C119 68 · L26 33µ · MP6 · T10 U310 · C123 4,7 · L27 10µ · R133 1,5k · C26 4,7n · L25 0,56µ · R137 470 · R136 120 · –14V

MP12 · R92 100k · C76 1n · +14V · R93 562 · R96 11,5k · R97 0 · R95 7,5k · B50II LF412 · R101 715 · B48I NE5532AF · R107 1,05k · B49 CMP01EZ · R94 562 · C77 1µ · R108 11k · R106 10k · GL10 1N827 · C85 1µ · MP15.3 · BR15 · R100 4,99k · R110 1k · R35 · MP14. · BR14 · R99 3,09k · C79 82 · R104 11,5k · R105 10k · R102 10 k · B50I LF412 · B46 AD7541KN · GL14 1N4448 · R103 33k · C84 1n · B48II · T20 BCY59 IX · R91 3,3k · B42I SN74LS10 · B42II SN74LS10 · K1

B44II SN74LS74 · B22.9 · +5V · R140 1k · R142 1k · R141 15k · T21 BCY59IX · R143 15k · T22 BCY59IX · B47II · B47IV · B44I SN74LS74 · R124 680 · C89 1n · B47III · B47I SN74LS08 · B43I SN74LS123 · C87 150 · GL11 1N4448 · R122 2,7k · GL12 1N4448 · R123 2,7k · C88 150 · GL13 1N4448 · R120 2,7k · C86 1µ · B43II SN74LS123 · R121 243k · C90 150 · R109 10k · B42III SN74LS10 · –5V

R26 4,7k · R29 4,7k · B13II NE5532 · K2 · B12II NE5532 · MP4 · R33 3,4k · R34 220 · B48.1 · K1

C30 4,7n · R47 220 · T11 3N204 · R44 82k · R43 330k · C27 1n · C40 4,7n · C31 4,7n · R49 180k · C41 4,7n · L12 10µ · +14V · R48 220 · R42 100k · C28 1n · R50 220 · C42 22 · C35 4,7n · R45 1k · R46 82k · R51 120k · T12 3N204 · R52 82k · R53 220 · C43 4,7n · C32 1n · L10 0,82µ · L11 0,22µ · C33 8,2 · C34 47 · 45 MHz FM · BU51 · zum to Interpolationssynthesizer III

R81 2,2k · B41I LM193 · +5V · +14V · R84 2,49k · R83 1k · ALARM · BU7 · ST7 · D7 · B41II · R85 9,53k · R86 2k · ST50.1 · MP11 · R82 33k · C71 0,47µ · B40 DG300 · B38IV DG201BK · C69 1µ · R75 6,8k · B38II DG201BK · B38I DG201BK · +5V · R74 820 · R73 33k · R71 820 · R70 820k · C70 33n · R76 330k · B38III DG201BK · R79 100 · R80 22k · GL9 1N4448 · B37 11C44 · R72 33k · C65 1µ · B39 LF356 · R77 8,2k · +14V · C66 22µ · R78 1k · –14V · +14V ST50.12 · BU6 ST6 D6 · +5V ST50.10 · BU5 ST5 D5 · –14V ST50.7 · BU4 ST4 D4

C44 4,7n · +5V · R56 33 · R54 270 · C45 4,7n · T13 BSX29 · R55 680 · R57 82 · MP7 · B30I SN74S197 · B31 SN54S169 · B32I SN74LS393 · MP10 · B34I SN74LS02 · B34III · B35 SN74LS390 · R67 1k · T17 BCY59IX · R68 15k · C61 4,7n · R62 33 · C62 4,7n · R61 270 · R58 680 · T15 BSX29 · R63 680 · R64 82 · C60 1n · 10 MHz · B30II SN74S197 · B32II SN74LS393 · MP8 · B36 SN74LS390 · B34II SN74LS02 · B34IV SN74LS02 · R11 · BU53 · vom from Interpolationssynthesizer II

K2 · 12 · Parallel Mod. · 2 · BU52 · zum SMPC-Puffer To SMPC-buffer

Ansicht und Leitungsführung Bauteilseite
View of tracks on component side

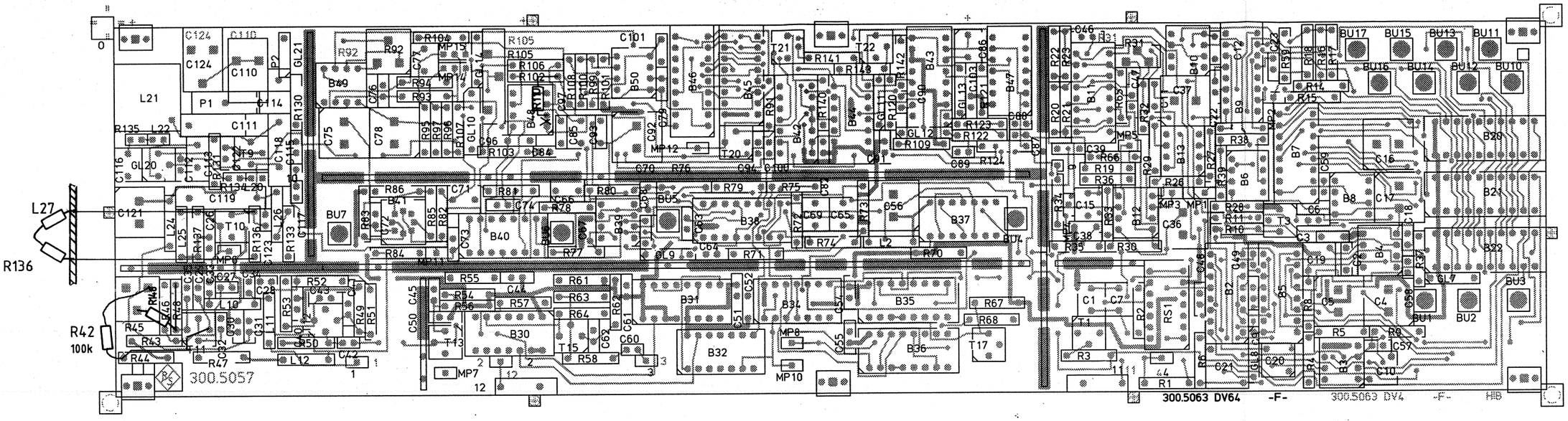

Symbolschlussel

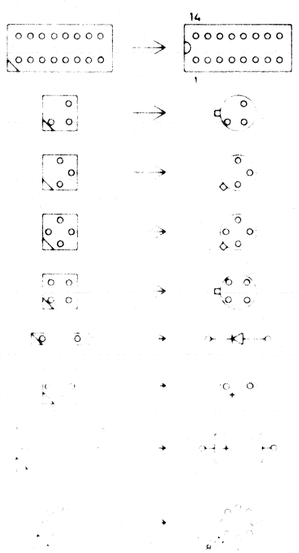

Achtung! MOS-Bauteile
Caution. MOS components

F	27860	5.82	LS	Maße ohne Toleranzangabe		Maßstab 1:1	
G	27860	7.82	LS			Halbzeug, Werkstoff	
H	30063	4.83	gs				
J	32288	3.85	GS				
				1KG / Tag / Name		Benennung	Z
				Bearb 5.82 LS		FM-STUFE FM-Stage	
				Gepr			
				Norm			
And Zust	Anderungs-Mitteilung	Tag	Name	ROHDE&SCHWARZ		Zeichn-Nr 300.5057	Blatt-Nr 2
				zu Gerat SMPC		reg V 300.1000V erste Z 300.7014	v Bl

Für diese Unterlage behalten wir uns alle Rechte vor.

ISO-Projektion Methode E

Ansicht und Leitungsführung Lötseite
View of tracks on solder side

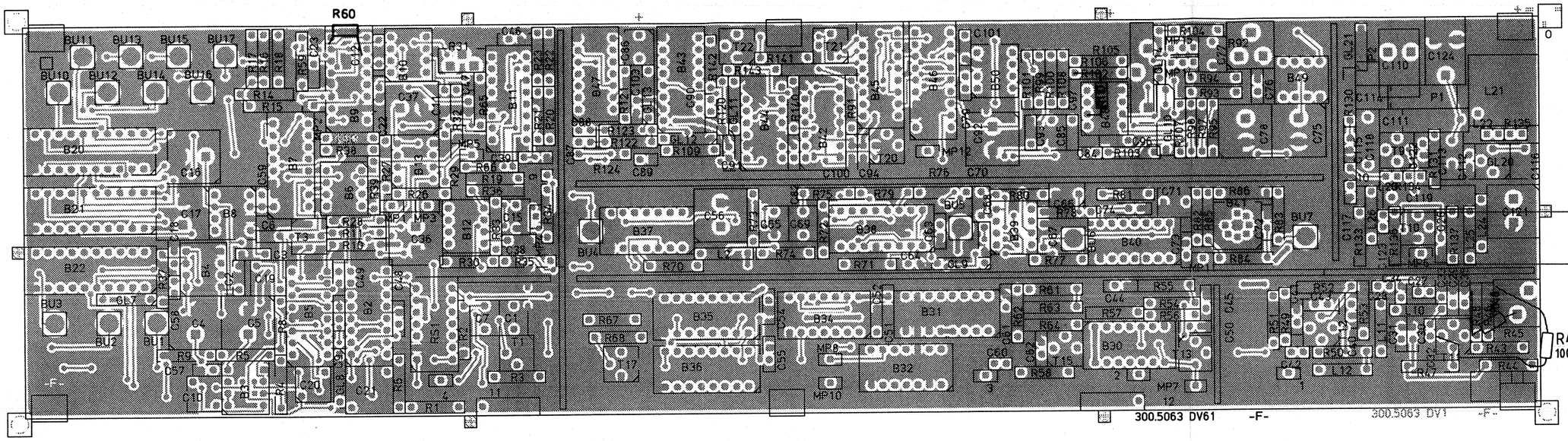

Symbolschlussel

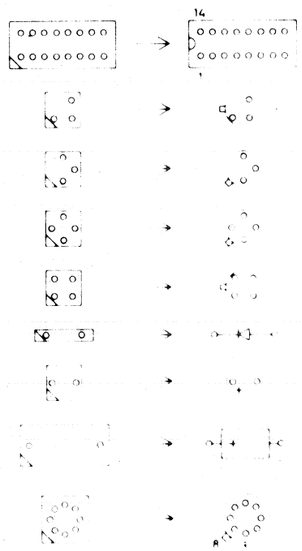

Achtung! MOS-Bauteile
Caution. MOS components

F	27860	5.82	LS	Maße ohne Toleranzangabe			Maßstab 1 : 1
G	27860	7.82	LS				Halbzeug, Werkstoff
H	30063	4.83	gs				
J	32288	3.85	Gs,	1 KG	Tag	Name	Benennung
				Bearb	5.82	LS	FM-STUFE
				Gepr.			FM-Stage
				Norm			Z
Änd. Zust.	Änderungs-Mitteilung	Tag	Name	ROHDE&SCHWARZ			Zeichn.-Nr. 300.5057 Blatt-Nr. 3 v. Bl.
				zu Gerat SMPC			reg. v. 300.1000 V erste Z 300.7014

Für diese Unterlage behalten wir uns alle Rechte vor.

ISO-Projektion Methode E

PF 095 2493-0781

07 6001 81

Ansicht und Leitungsführung Bauteilseite
View of tracks on component side

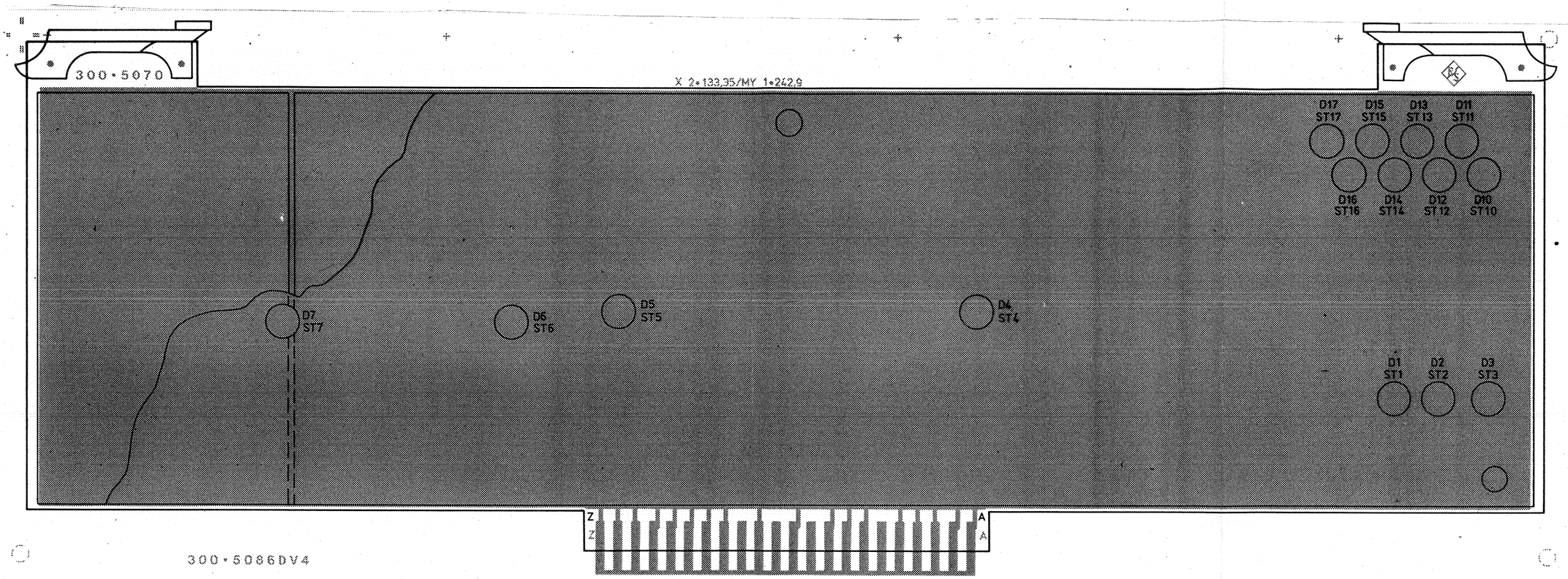

Für diese Unterlage behalten wir uns alle Rechte vor.

ISO Projektion
Methode E

E	———	28.1.82	LS	Maße ohne Toleranzangabe		Maßstab 1 : 1	
						Halbzeug, Werkstoff	
				1KGA	Tag	Name	Benennung: Zuführ. FM-Stufe / Feed FM-Stage — Z
				Bearb	28.1.82	LS	
				Gepr			
				Norm			
And Zust	Anderungs-Mitteilung	Tag	Name	ROHDE & SCHWARZ		Zeichn.-Nr 300.5070	Blatt-Nr 2 v. Bl.
				zu Gerat SMPC		reg. V 300.1000V	erste Z 300.7014

Ansicht und Leitungsführung Lötseite
View of tracks on solder side

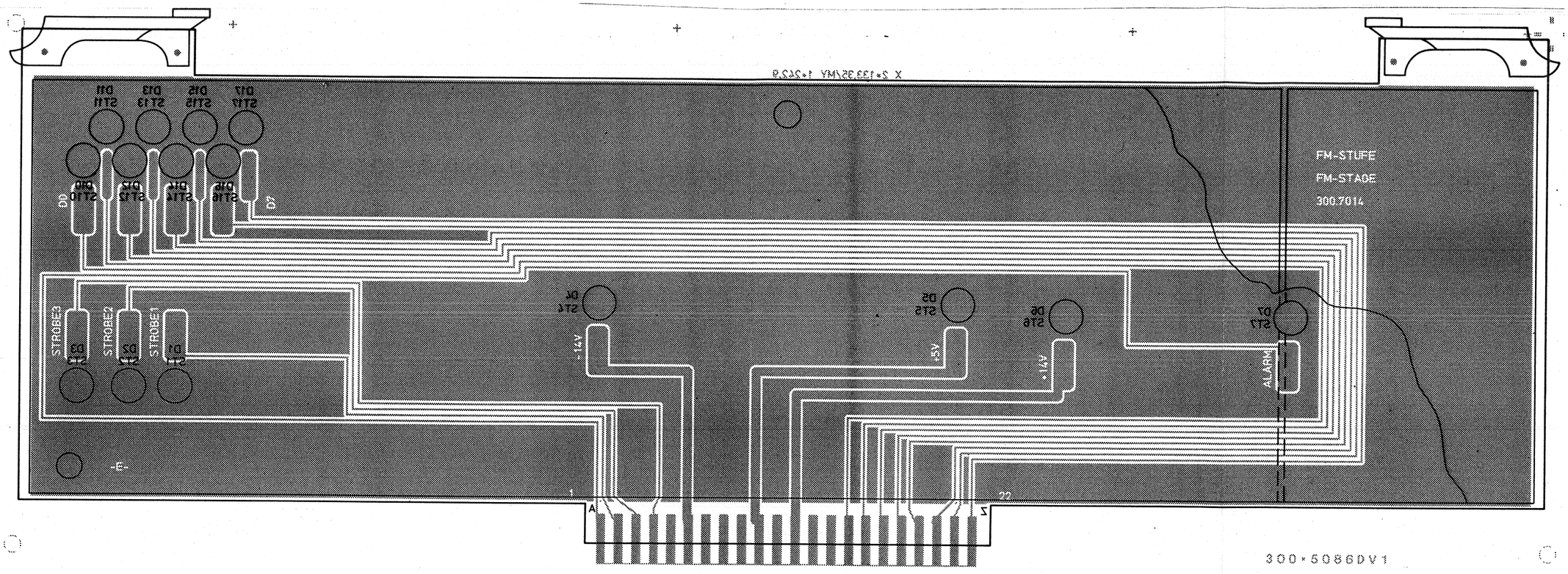

Für diese Unterlage behalten wir uns alle Rechte vor.

ISO-Projektion Methode E

E	———	28.1.82	LS	Maße ohne Toleranzangabe		Maßstab 1 : 1	
						Halbzeug, Werkstoff	
				1KGA	Tag	Name	Benennung: Zuführ. FM-Stufe / Feed FM-Stage — Z
				Bearb	28.1.82	LS	
				Gepr			
				Norm			
And Zust	Anderungs-Mitteilung	Tag	Name	ROHDE & SCHWARZ		Zeichn.-Nr 300.5070	Blatt-Nr 3 v Bl.
				zu Gerat SMPC		reg : V 300.1000 V	erste Z 300.7014

PF 095 2493-0781 1 2 3 4 5 6 7 8 07 6001 81

ROHDE&SCHWARZ

SERVICE INSTRUCTIONS

AF Generator and Attenuator

300.3819 (Y3)

Table of Contents

		Page
5	Service Instructions for AF Generator and Attenuator 300.3819 (Y3)	5.1
5.1	Circuit Description	5.1
5.2	Checking and Adjusting	5.4
5.2.1	Checking the Adder Stage	5.4
5.2.2	Adjusting Spurious and Harmonic Signal Levels	5.6
5.2.3	Filter Adjustment (L30)	5.6
5.2.4	Adjusting the Output Level and Frequence Response (R20, R43)	5.6
5.2.5	Checking the Output Voltage and Frequency	5.6
5.2.6	Checking the Distortion	5.6
5.2.7	Checking the Internal FM Output	5.6
5.2.8	Checking the AM Reference Value	5.7
5.2.9	Checking the AM Attenuator	5.7
5.2.10	Checking the External AM Path	5.7
5.2.11	Adjusting and Checking the ALC Output (R74)	5.7
5.2.12	Checking the AM Input Monitor Circuit	5.8
5.2.13	Checking the FM Input Monitor Circuit and the External FM Path	5.8
5.2.14	Checking Mixed Modulation	5.8
5.3	Troubleshooting	5.9
5.3.1	No Voltage at AF Output on Rear Panel	5.9
5.3.2	No AF Voltage at BU61 during FM Operation	5.10
5.3.3	No AF Voltage (dependent on AM Attenuator) at BU66 during AM Operation	5.10
5.3.4	No Indication of External Modulation	5.11
5.4	Interfaces	5.12

Parts list
Circuit diagram
Components location plans

5 Service Instructions for AF Generator and Attenuator 300.3819 (Y3)

5.1 Circuit Description

(See circuit diagram 300.3819 S and Fig. 5-1)

The digital AF synthesizer is tunable within the range 10 Hz to 100 kHz. The minimal resolution is 1 Hz (up to 10 kHz). A binary coded increment I is added to a clock frequency of 1 MHz in the 20-bit adder Bu to B11. The clock frequency is derived from the 10-MHz reference frequency. The 12 most significant bits provide the addresses for the sinewave EPROMs B14/B15 where the amplitude values of one cycle of sinusoidal oscillation with a resolution of 12 bits are stored. B14 contains the lower four bits and B15 the upper eight bits. From the chosen modulation frequency f_{AF} and the clock frequency f_{dk} = 1 MHz, the required increment I is defined from the following formula:

$$I = \frac{f_{AF}\ (Hz)}{10^6} \times 2^{20}$$

The following D/A converter now produces a stepped sinusoidal signal. In order to minimize interference at the D/A converter, data is retained in the latches B16/B17 during the access time of the EPROMs until the new data has had time to settle.

Interference on the sinusoidal signal is removed by a sample and hold circuit whose sample-pulse timing can be optimized with R23/R24.

The active, 100-kHz low pass filter B30 smoothes the output signal and together with the series resonance circuit L30/C45 ensures good suppression of the clock frequency. The modulation signal is fed to the SMPC's rear-panel AF output via B36 (nominal level adjustment) and B37.

Internal FM Operation

The f_{AF} is fed to BU61 via B35 and B66.

Internal AM Operation

The AM attenuator B41 is switched in by B38, B43 and B55. The modulation depth is set with a 10-bit resolution. The data word y is calculated from the formula:

$$y = m \times \frac{2^{10}}{100}$$

and is transferred in binary code. When the modulation depth m is < 10, a fixed 20-dB attenuator is switched into circuit by B43 and, as a consequence, m must be multiplied by 10. The signal superimposed with the AM reference value (at MP40) is fed via B56 to BU66.

AM-ALC Operation

The source of the AM reference value is selected by B55 and can be varied by an external DC voltage applied to BU64 (AM input). The level converter B57 provides an output voltage of -4.24 to 0 V for an input voltage of 0 to -2.82 V.

External AM Operation

B58 amplifies the AF applied at BU64 to the required reference level and the signal then is fed via B38 to the input of the AM attenuator.

Level Monitoring

Two level monitoring circuits are provided for external modulation. They indicate whether the level applied to BU64 (AM) or BU65 (FM) has deviated by more than 3% from the correct value. The peak-value rectifiers B59 (AM) and B65 (FM) feed, via the window comparators B61, the relevant data to the tri-state driver B52 which is interrogated by the microprocessor (Y1).

FM-EXT./FM-DC Operation

The applied voltage is fed, via B66, to the FM output BU61.

Mixed-modulation Operation

At the FM-EXT. input, an additional modulation signal can be applied and combined with the internal AF voltage. The combined signal is available at the FM output BU61.

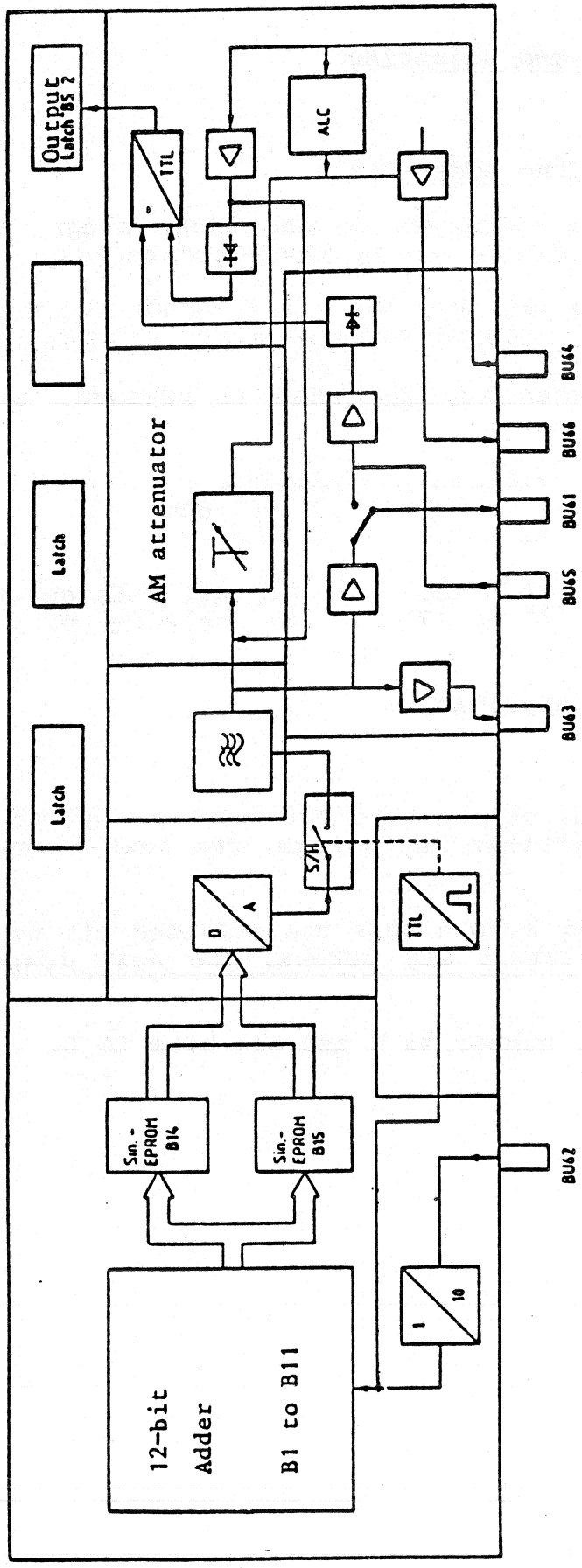

Fig. 5-1 Block diagram of AF generator and attenuator

5.2 Checking and Adjusting

5.2.1 Checking the Adder Stage

In order to check the operation of the adder stage, individual bits of the increment can be set by the microprocessor (Y1).

Preparation in Y1: change B10 for a test EPROM Id. No. 337.9904 (included in Service Kit XPC-Z1)

After switching on, when key 20 (kHz) is pressed, the display shows:

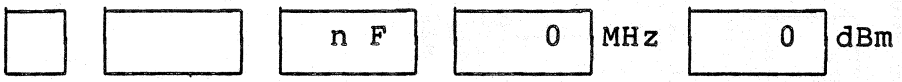

bit no. (0 to 17)

0: all bits set to L
1: selected bit is set H

The following is then applicable:

"0 to 17" bit number

"+" The first key stroke sets the selected bit to 1. With every further key stroke, the next highest bit is set to 1.

"-" The first key stroke sets the selected bit to 1. With each further key stroke, the next lowest bit is set to 1.

"C" Sets the bit number to 0 and all bits to L.

The carry outputs of the individual adders can now be checked with an oscilloscope. The following pulse rates should be displayed:

Check point	Bit set to H	Period (µs)
MP 7	0	16
	1	8
	2	4
	3	2
MP 8	4	16
	5	8
	6	4
	7	2
MP 9	8	16
	9	8
	10	4
	11	2
MP 10	12	16
	13	8
	14	4
	15	2
MP 11	16	16
	17	8

5.2.2 Adjusting Spurious and Harmonic Signal Levels

With a f_{mod} of 70 kHz, minimize ($<$ -65 dBc) the spurious and harmonic signal levels with R23 and R24. Check the complete frequency range at various settings to ensure that the spurious and harmonic levels remain $<<$ -65 dBc and if necessary readjust R23 and R24.

5.2.3 Filter Adjustment (L30)

→ connect an AF spectrum analyzer to BU46 (rear panel $_{AF}$output).

Adjust the level of the 1-MHz clock frequency to $<$ -75 dBc with L30.

5.2.4 Adjusting the Output Level and Frequency Response (R20, R43)

→ connect a millivoltmeter (R_i $>$ 1 MΩ) to MP31.

With f_{AF} = 1 kHz adjust the output level to 3.000 V_{rms} with R20.

Subsequently, adjust the frequency response from 10 Hz to 100 kHz to $<$ ±0.5% with C43.

5.2.5 Checking the Output Voltage and Frequency

→ connect the millivoltmeter to BU63. The f_{AF} voltage measured at 1 kHz is to be 1 ±0.02 V_{rms}.

→ connect a frequency counter to BU46. Synchronize the reference frequencies from the counter and SMPC. Within the whole frequency range the deviation of the measured from the selected frequency is to be $<$ 1 Hz.

5.2.6 Checking the Distortion

→ connect a distortion meter to BU63.

The distortion is to be $<$ 0.1% within the frequency range 10 Hz to 100 kHz.

5.2.7 Checking the Internal FM Output

→ switch to internal FM. Connect millivoltmeter to BU61.

The AF voltage (10 Hz to 100 kHz) at BU61 is to be 1 ±0.025 V_{rms}.

5.2.8 Checking the AM Reference Value

→ switch to "unmodulated" operation.

→ connect DC voltmeter to MP40.

The DC voltage at MP40 is to be -4.24 ±0.02 V.

5.2.9 Checking the AM Attenuator

→ set the modulation frequency to 1 kHz and switch to internal AM.

Measure the AF voltage at BU66 for various modulation depths m. The nominal value is (m x 3) V_{rms}; the deviation for m = 10 to 99% is to be < 5 mV_{rms}, that for m = 0.1 to 9.9% < 1 mV_{rms}.

Vary the modulation frequency when m = 99%. The frequency response between 10 Hz and 50 kHz is to be < ±0.6%.

5.2.10 Checking the External AM Path

→ switch to external AM.

→ connect the AF generator, set to between 10 Hz and 50 kHz and 1.00 V_{rms}, to BU64 (external AM).

Measure the voltage at BU66 as described in 5.2.9.

5.2.11 Adjusting and Checking the ALC Output (R74)

→ key in RCL93 at the SMPC.

→ connect a DC voltage source of 0 to -4.24 V to BU64 (V_i).

→ connect a DC voltmeter to BU66 (V_o).

With an input DC voltage V_i < -2.82 V, V_o is to be adjusted to 0 V ±10 mV with R74.

In the range V_i = 0 to -2.82 V, V_o must vary linearly from -4.24 to 0 V.

5.2.12 Checking the AM Input Monitor Circuit

→ switch to external AM.

→ connect the AF generator, set to 1 kHz, to BU64.

Measure the voltage V_i at BU64.

With V_i = 1 ±0.03 V_{rms}, the modulation depth is indicated in the AM display 3.

With a smaller V_i, only the lower segments of the display should be on; with a larger V_i, only the upper segments of the display should be on.

5.2.13 Checking the FM Input Monitor Circuit and the External FM Path

→ switch to external FM.

→ connect AF generator, set to 1 kHz, to BU65.

When the voltage at BU65 is varied, the FM display 2 is to respond as the AM display 3 in 5.2.12.

→ connect millivoltmeter to BU61. The difference between this measured voltage and that input at BU65 is to be < ±0.5%.

5.2.14 Checking Mixed Modulation

→ key in RCL92 at the SMPC.

→ connect AF generator, set to 1 V_{rms}, to BU65.

An oscilloscope connected to BU61 must display the sum of the internal AF voltage and the externally applied signal (V_{pp} = 5.65 V approx.).

5.3.1 No Voltage at AF Output on Rear Panel

(For signature analysis, see microprocessor subassembly Y1.)

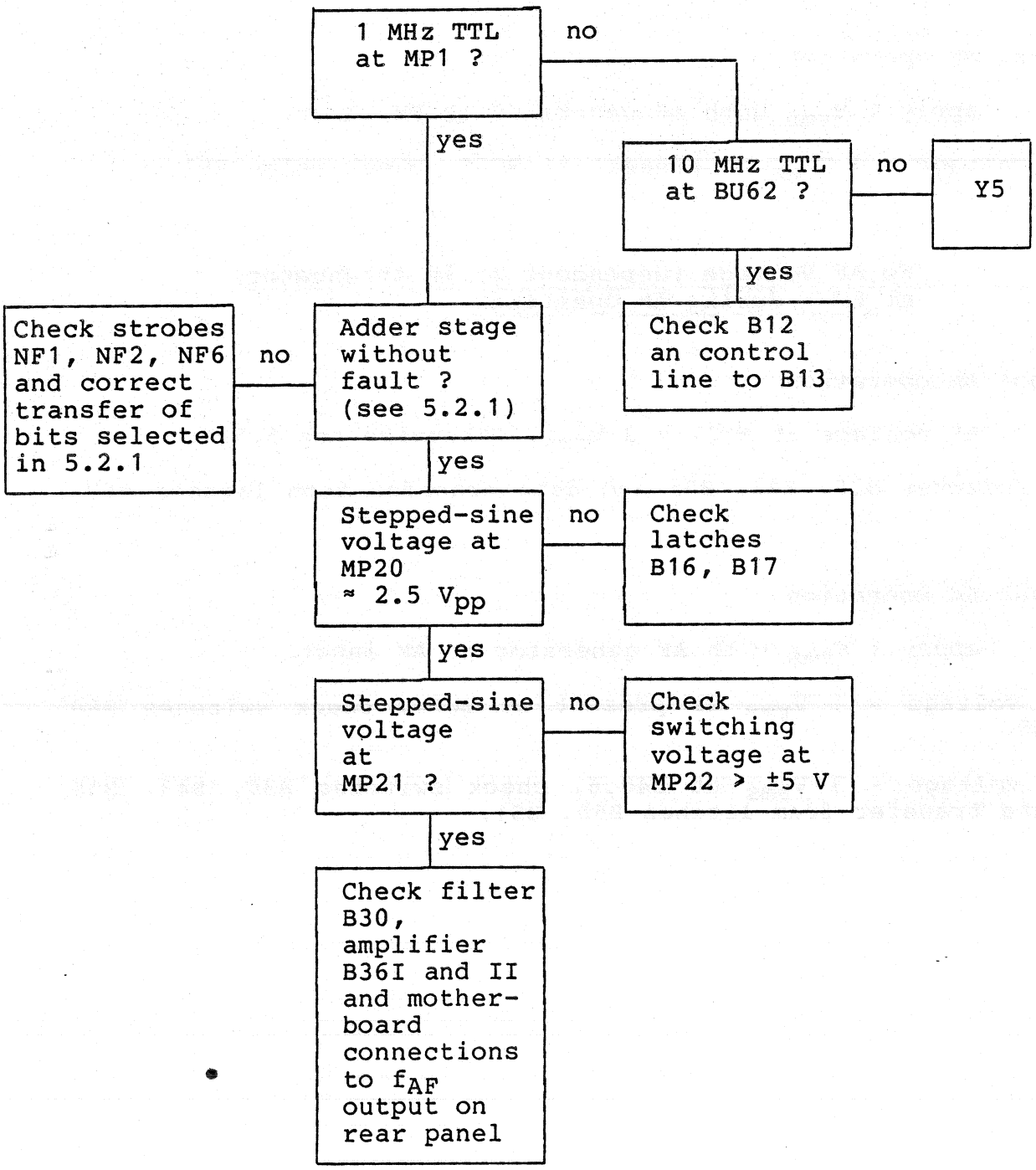

5.3.2 No AF Voltage at BU61 during FM Operation

Internal FM operation

Setup: AF voltage at MP31 = 3 V_{rms}, otherwise see 5.3.1.

Check switch B38 and its control lines.

External FM operation

Setup: apply 1 V_{rms} with AF generator to FM input.

If AF voltage = 1 V_{rms} is present at BU65, check relay RS1.

5.3.3 No AF Voltage (dependent on AM Attenuator) at BU66 during AM Operation

Internal AM operation

Setup: AF voltage at MP31 = 3 V_{rms}, otherwise see 5.3.1.

Check switches B38, B43, B55 and data transfer from latches B50, B51.

External AM operation

Setup: apply 1 V_{rms} with AF generator to AM input.

If AF voltage = 1 V_{rms} is present at BU64, check switches B60 and B38.

If AF voltage = 3 V_{rms} at B40.6, check switches B38, B43, B55 and data transfer from latches B50, B51.

5.3.4 No Indication of External Modulation

External AM

Follow signal to B59.3 where nominal level is 3.00 V_{rms}.
2.1 V_{DC} should then be present at MP50.

Comparators

Voltage at BU64	B61.1	B61.8	Voltage at BU65	B61.7	B61.14
too low	L	L	too low	L	L
correct	H	L	correct	H	L
too high	H	H	too high	H	H

External FM

Follow signal to B65.3 where nominal level is 3.00 V_{rms}.
2.1 V_{DC} should then be present at MP60.
For comparator states see table above.

B53.6 is normally H; during interrogation by microprocessor (Y1), it is L for 15 µs in every 40 ms.

Digital Interface

Data bus ST 60	D7 .22	D6 .21	D5 .20	D4 .19	D3 .18	D2 .17	D1 .16	DØ .15	Strobe ST 60
1	bit 7 ←							bit Ø	1
Ø				Increment I					.13
1	bit 15 ←							bit 8	2
Ø				Increment I					.11
1	X	X	X	X	Level monitor FM		Level monitor AM		3
Ø									.2
1	mix,ext FM	X	ext AM	AC AM	on AM	<10% AM	bitØ → bit1		4
Ø	int		DC,int	DC	off	>10%	y		.4
1	bit 2 →							bit 9	5
Ø				Modulation depth (y)					.7
1	X	mix,int FM	int AM	on AF	on AF	X	bit17 ← bit16		6
Ø		off,ext	ext	off	off		Increment I		.9

Strobe 3: With a H to L transition, the tri-state driver B52 switches into the low impedance state for 15 µs approx. During this period, the microprocessor interrogates the level monitor circuits (s. 5.3.4).

The remaining strobes cause, with a L to H transition, the transfer of the data from the data bus. The increment I and modulation depth setting y are transferred as binary code (see 5.1 for calculations).

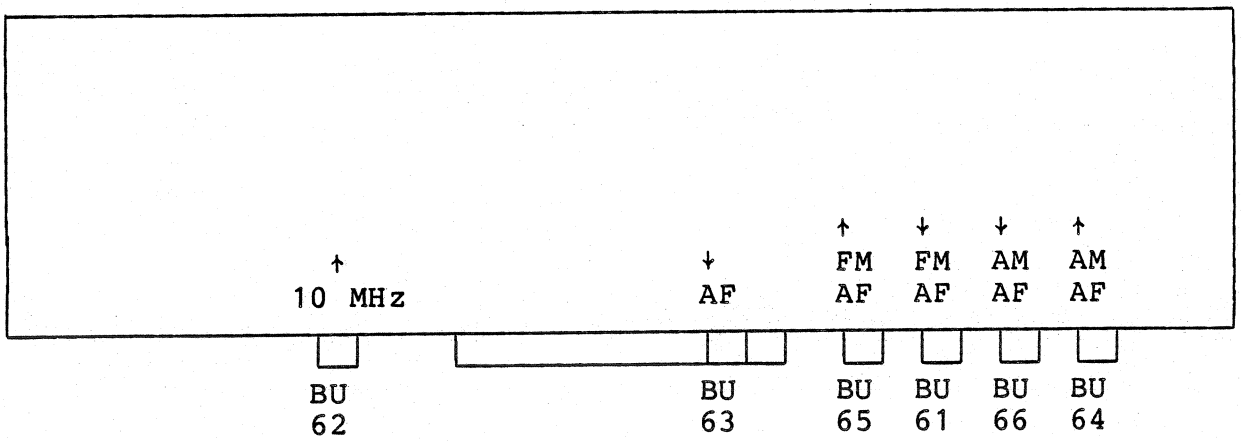

ST/BU	61	62	63	64
f	0 to 125kHz	10MHz	10Hz to 100kHz	0Hz to 50kHz
Level	1 V_{rms}	TTL	1 V_{rms}	1 V_{rms}, 0 to -2.82 V_{DC}
R_i	< 1 Ω		10 Ω	600 Ω
Coupling	DC		DC	DC
Signal shape	sine		sine	sine

ST/BU	65	66
f	0 to 125 kHz	0 to 50 kHz
Level	1 V_{rms}	3 mV_{rms} to 3 V_{rms}, 0 to -4.24V_{DC}
R_i	600 Ω	< 1 Ω
Coupling	DC	DC
Signal shape	Sine	Sine

ROHDE & SCHWARZ
MÜNCHEN

Schaltteillisten
Stromläufe
Bestückungspläne

Parts lists
Circuit diagrams
Components plans

R 29500 Bl. 2

Kennzeichen/Component No.	Benennung/Beschreibung/Designation	Sachnummer/Stock No.	enthalten in/contained in
B1	BL SN74LS273N 8BIT-D-REG. 8BIT-D-REGISTER TEXAS SN74LS273N	214.8998	300.5092
BIS/TO B6			
B7	BL SN74LS283N 4-BIT-ADD. IC SN74LS283N 4-BIT-ADD. TEXAS SN74LS283N	283.1760	300.5092
BIS/TO B11			
B12	BL SN74LS90N DEZ.ZAEHLER IC COUNTER SN74LS90N TEXAS SN74LS90N	266.7940	300.5092
B13	BL SN74LS132N 4XSCHMITT. IC SCHMITT TRIGGER SN74LS TEXAS SN74LS132132N	267.0291	300.5092
B14	BC 2732 PROGR.1 B14 EPROM	300.9781	300.9846
B15	BC 3732 PROGR.1 B15 EPROM	300.9800	300.9846
B16	BL SN74LS273N 8BIT-D-REG. 8BIT-D-REGISTER TEXAS SN74LS273N	214.8998	300.5092
B17	BL SN74LS273N 8BIT-D-REG. 8BIT-D-REGISTER TEXAS SN74LS273N	214.8998	300.5092
B20	BJ DAC80CBII 12B.D/A-CONV D/A-CONVERTER BURR-BROWN DAC-80CBI-I	300.6330	300.5092
B21	BO LF156H BIFET OPAMP OPERATIONAL AMPLIFIER MOTOROLA LF156H	BO 333.5862	300.5092
B22	BJ SD5000N 4X ANALOGSCH BJ SD5000N 4XANALOGSWITCH SILICONIX SD5000N	BJ 342.2340	300.5092
B23	BO LM218H PREC. OPAMP OPERATIONAL AMPLIFIER AMD LM218H	BO 275.0845	300.5092
B30	BO HA2A-2525 H.S.R.OPAMP OPERATIONAL AMPLIFIER HARRIS HA2A-2525-5	BO 334.4360	300.5092
B35	BO SE5534AFE LOW N.OPAMP OPERATIONAL AMPLIFIER SIGNETICS SE5534AFE	BO 301.3335	300.5092
B36	BO NE5532AFE 2XL.N.OPAMP OPERATIONAL AMPLIFIER VALVO NE5532AFE	BO 356.0450	300.5092
B38	BJ TL191CN 4X ANALOGSCH ANALOG SWITCH TEXAS INST TL191CN	BJ 300.6182	300.5092
B40	BO SE5534AFE LOW N.OPAMP OPERATIONAL AMPLIFIER SIGNETICS SE5534AFE	BO 301.3335	300.5092
B41	BJ AD7520KN 10B.D/A-CONV D/A-CONVERTER ANALOG-DEV AD7520KN	BJ 300.6499	300.5092

Für diese Unterlage behalten wir uns alle Rechte vor

Kennzeichen Component No.	Benennung/Beschreibung Designation	Sachnummer Stock No.	enthalten in contained in
B42	BO SE5534AFE LOW N.OPAMP OPERATIONAL AMPLIFIER SIGNETICS SE5534AFE	BO 301.3335	300.5092
B43	BJ TL191CN 4X ANALOGSCH ANALOG SWITCH TEXAS INST TL191CN	BJ 300.6182	300.5092
B44	BO SE5534AFE LOW N.OPAMP OPERATIONAL AMPLIFIER SIGNETICS SE5534AFE	BO 301.3335	300.5092
B45	BO AD581J 10V 10MA VREF VOLTAGE REFERENCE ANALOG-DEV AD581J	BO 300.6347	300.5092
B50	BL SN74LS273N 8BIT-D-REG. 8BIT-D-REGISTER TEXAS SN74LS273N	214.8998	300.5092
B51	BL SN74LS273N 8BIT-D-REG. 8BIT-D-REGISTER TEXAS SN74LS273N	214.8998	300.5092
B52	BL SN74LS125AN4/BUS-TREIB BL SN74LS125AN4/BUS-DRIV. TEXAS SN74LS125AN	292.0404	300.5092
B53	BL SN74LS122N MONOFLOP IC MONOFLOP SN74LS122N TEXAS SN74LS122N	303.8957	300.5092
B55	BJ TL604CP 2X ANALOGSCH ANALOG SWITCH TEXAS INST TL604CP	BJ 300.6199	300.5092
B56	BO SE5534AFE LOW N.OPAMP OPERATIONAL AMPLIFIER SIGNETICS SE5534AFE	BO 301.3335	300.5092
B57	BO LF156H BIFET OPAMP OPERATIONAL AMPLIFIER MOTOROLA LF156H	BO 333.5862	300.5092
B58	BO LF156H BIFET OPAMP OPERATIONAL AMPLIFIER MOTOROLA LF156H	BO 333.5862	300.5092
B59	BO SE5534AFE LOW N.OPAMP OPERATIONAL AMPLIFIER SIGNETICS SE5534AFE	BO 301.3335	300.5092
B60	BJ TL604CP 2X ANALOGSCH ANALOG SWITCH TEXAS INST TL604CP	BJ 300.6199	300.5092
B61	BO LM124J 4XL.P.OPAMP OPERATIONAL AMPLIFIER NSC LM124J	BO 300.6353	300.5092
B64	BO LF156H BIFET OPAMP OPERATIONAL AMPLIFIER MOTOROLA LF156H	BO 333.5862	300.5092
B65	BO SE5534AFE LOW N.OPAMP OPERATIONAL AMPLIFIER SIGNETICS SE5534AFE	BO 301.3335	300.5092
B66	BO NE5532AFE 2XL.N.OPAMP OPERATIONAL AMPLIFIER VALVO NE5532AFE	BO 356.0450	300.5092
BU1	FP BUCHSE VERTIKAL P.V.1P SOCKET BERG 75377-001	FP 278.5577	300.5092

Kennzeichen Component No.	Benennung/Beschreibung Designation	Sachnummer Stock No.	enthalten in contained in
BIS/TO BU17			
BU61	FJ EINBAUBUCHSE SYST.SMS FIXED SOCKET RADIALL R.299 012	300.6876	
BU62	FJ EINBAUBUCHSE SYST.SMS FIXED SOCKET RADIALL R.299 012	300.6876	
BU63	FJ EINBAUBUCHSE SYST.SMS FIXED SOCKET RADIALL R.299 012	300.6876	
BU64	FJ EINBAUBUCHSE SYST.SMS FIXED SOCKET RADIALL R.299 012	300.6876	
BU65	FJ EINBAUBUCHSE SYST.SMS FIXED SOCKET RADIALL R.299 012	300.6876	
BU66	FJ EINBAUBUCHSE SYST.SMS FIXED SOCKET RADIALL R.299 012	300.6876	
C1	CC 10NF-20+50%7X8R6000 CAPACITOR VALVO 2222 63051 64051103	CC 087.7525	300.5092
BIS/TO C17			
C18	CE 100UF-10+50% 16V 9X13 ELECTROLYTIC CAPACITOR ROEDERST EK 00CB 310 D	CE 006.7165	300.5092
C19	CE 100UF-10+50% 16V 9X13 ELECTROLYTIC CAPACITOR ROEDERST EK 00CB 310 D	CE 006.7165	300.5092
C20	CE 100UF-10+50% 16V 9X13 ELECTROLYTIC CAPACITOR ROEDERST EK 00CB 310 D	CE 006.7165	300.5092
C21	CE 100UF-10+50% 25V 13X13 ELECTROLYTIC CAPACITOR ROEDERST ELKOEK100/25	CE 208.4007	300.5092
C22	CE 100UF-10+50% 25V 13X13 ELECTROLYTIC CAPACITOR ROEDERST ELKOEK100/25	CE 208.4007	300.5092
C23	CK 47NF+-5%63V5RM MKT CAPACITOR WIMA MKS2/63/0,047UF/5%	CK 099.2917	300.5092
C24	CK 47NF+-5%63V5RM MKT CAPACITOR WIMA MKS2/63/0,047UF/5%	CK 099.2917	300.5092
C25	CK 47NF+-5%63V5RM MKT CAPACITOR WIMA MKS2/63/0,047UF/5%	CK 099.2917	300.5092
C26	CC 10NF-20+50%7X8R6000 CAPACITOR VALVO 2222 63051 64051103	CC 087.7525	300.5092
C27	CC 10NF-20+50%7X8R6000 CAPACITOR VALVO 2222 63051 64051103	CC 087.7525	300.5092

Für diese Unterlage behalten wir uns alle Rechte vor

Kennzeichen Component No.	Benennung/Beschreibung Designation	Sachnummer Stock No.	enthalten in contained in
C28	CC 220PF+-2%6X7N750 CAPACITOR VALVO 2222 678 58221	CC 087.6941	300.5092
C29	CC 10NF-20+50%7X8R6000 CAPACITOR VALVO 2222 63051 64051103	CC 087.7525	300.5092
C30	CC 10NF-20+50%7X8R6000 CAPACITOR VALVO 2222 63051 64051103	CC 087.7525	300.5092
C31	CC 100PF+-2%4X5N750 CAPACITOR VALVO 2222 678 58101	CC 087.6906	300.5092
C32	CC 100PF+-2%4X5N750 CAPACITOR VALVO 2222 678 58101	CC 087.6906	300.5092
C33	CC 4,7NF+-10%6X9R2000 CAPACITOR VALVO 2222 63051 472	CC 087.7102	300.5092
C34	CC 47PF+-2%4X5N150 CAPACITOR VALVO 2222 678 34479	CC 087.6670	300.5092
C35	CC 10NF-20+50%7X8R6000 CAPACITOR VALVO 2222 63051 64051103	CC 087.7525	300.5092
C36	CC 10NF-20+50%7X8R6000 CAPACITOR VALVO 2222 63051 64051103	CC 087.7525	300.5092
C37	CC 1UF+-10%50V7K1200VIEL CAPACITOR UNION CARB CK06BX105K	CC 084.5538	300.5092
C38	CC 1UF+-10%50V7K1200VIEL CAPACITOR UNION CARB CK06BX105K	CC 084.5538	300.5092
C39	CC 1UF+-10%50V7K1200VIEL CAPACITOR UNION CARB CK06BX105K	CC 084.5538	300.5092
C40	CK 1,2NF+-1%63V6,3X11 KP CAPACITOR SIEMENS B33531-A5122-F	CK 283.1682	300.5092
C41	CK 3,9NF+-1%63V6,3QUX11KP CAPACITOR SIEMENS B33531-A5392-F	CK 340.8057	300.5092
C42	CK 150PF+-1%63V6,3X11 KP CAPACITOR SIEMENS B33531-A5151-F	CK 340.8070	300.5092
C43	CC 10NF-20+50%7X8R6000 CAPACITOR VALVO 2222 63051 64051103	CC 087.7525	300.5092
C44	CC 10NF-20+50%7X8R6000 CAPACITOR VALVO 2222 63051 64051103	CC 087.7525	300.5092
C45	CK 120PF+-1%63V 6,3X11 KP FOIL CAPACITOR SIEMENS B33531-A5121-F	CK 099.3613	300.5092
C47	CT 16PF KF-TRIMMER 1SEIT. CAPACITOR VALVO KF-TR.2222/809/05003	252.5634	300.5092

Kennzeichen Component No.	Benennung/Beschreibung Designation	Sachnummer Stock No.	enthalten in contained in
C49	CC 1UF+-10%50V7K1200VIEL CAPACITOR UNION CARB CK06BX105K	CC 084.5538	300.5092
C50	CC 10NF-20+50%7X8R6000 CAPACITOR VALVO 2222 63051 64051103	CC 087.7525	300.5092
C51	CC 1UF+-10%50V7K1200VIEL CAPACITOR UNION CARB CK06BX105K	CC 084.5538	300.5092
C52	CC 10NF-20+50%7X8R6000 CAPACITOR VALVO 2222 63051 64051103	CC 087.7525	300.5092
C53	CC 10NF-20+50%7X8R6000 CAPACITOR VALVO 2222 63051 64051103	CC 087.7525	300.5092
C54	CC 10NF-20+50%7X8R6000 CAPACITOR VALVO 2222 63051 64051103	CC 087.7525	300.5092
C56	CC 10NF-20+50%7X8R6000 CAPACITOR VALVO 2222 63051 64051103	CC 087.7525	300.5092
C57	CC 10NF-20+50%7X8R6000 CAPACITOR VALVO 2222 63051 64051103	CC 087.7525	300.5092
C58	CC 10NF-20+50%7X8R6000 CAPACITOR VALVO 2222 63051 64051103	CC 087.7525	300.5092
C59	CE 100UF-10+50% 25V 13X13 ELECTROLYTIC CAPACITOR ROEDERST ELKOEK100/25	CE 208.4007	300.5092
C60	CC 10NF-20+50%7X8R6000 CAPACITOR VALVO 2222 63051 64051103	CC 087.7525	300.5092
C61	CC 10NF-20+50%7X8R6000 CAPACITOR VALVO 2222 63051 64051103	CC 087.7525	300.5092
C62	CC 10NF-20+50%7X8R6000 CAPACITOR VALVO 2222 63051 64051103	CC 087.7525	300.5092
C63	CC 15PF+-2%3X4NP0 CAPACITOR VALVO 2222 678 10159	CC 087.6441	300.5092
C64	CC 10NF-20+50%7X8R6000 CAPACITOR VALVO 2222 63051 64051103	CC 087.7525	300.5092
BIS/TO C68			
C69	CE 100UF-10+50% 25V 13X13 ELECTROLYTIC CAPACITOR ROEDERST ELKOEK100/25	CE 208.4007	300.5092
C70	CC 10NF-20+50%7X8R6000 CAPACITOR VALVO 2222 63051 64051103	CC 087.7525	300.5092
C71	CC 1UF+-10%50V7K1200VIEL CAPACITOR UNION CARB CK06BX105K	CC 084.5538	300.5092

Für diese Unterlage behalten wir uns alle Rechte vor

Kennzeichen Component No.	Benennung/Beschreibung Designation	Sachnummer Stock No.	enthalten in contained in
C72	CC 10NF-20+50%7X8R6000 CAPACITOR VALVO 2222 63051 64051103	CC 087.7525	300.5092
C73	CC 1UF+-10%50V7K1200VIEL CAPACITOR UNION CARB CK06BX105K	CC 084.5538	300.5092
C74	CC 10NF-20+50%7X8R6000 CAPACITOR VALVO 2222 63051 64051103	CC 087.7525	300.5092
BIS/TO C78			
C79	CK 470NF+-5%63V5RM MKT CAPACITOR WIMA MKS2/63/0,47UF/5%	CK 099.2975	300.5092
C80	CC 10NF-20+50%7X8R6000 CAPACITOR VALVO 2222 63051 64051103	CC 087.7525	300.5092
BIS/TO C85			
C86	CE 100UF-10+50% 25V 13X13 ELECTROLYTIC CAPACITOR ROEDERST ELKOEK100/25	CE 208.4007	300.5092
C87	CC 10NF-20+50%7X8R6000 CAPACITOR VALVO 2222 63051 64051103	CC 087.7525	300.5092
C90	CK 100NF+-5%63V5RM MKT CAPACITOR WIMA MKS/2/63/0,1UF/5%	CK 099.2930	300.5092
C91	CC 10NF-20+50%7X8R6000 CAPACITOR VALVO 2222 63051 64051103	CC 087.7525	300.5092
BIS/TO C94			
C96	CE 100UF-10+50% 25V 13X13 ELECTROLYTIC CAPACITOR ROEDERST ELKOEK100/25	CE 208.4007	300.5092
C97	CE 100UF-10+50% 25V 13X13 ELECTROLYTIC CAPACITOR ROEDERST ELKOEK100/25	CE 208.4007	300.5092
C98	CC 10NF-20+50%7X8R6000 CAPACITOR VALVO 2222 63051 64051103	CC 087.7525	300.5092
C99	CC 10NF-20+50%7X8R6000 CAPACITOR VALVO 2222 63051 64051103	CC 087.7525	300.5092
C100	CC 1UF+-10%50V7K1200VIEL CAPACITOR UNION CARB CK06BX105K	CC 084.5538	300.5092
C101	CC 10NF-20+50%7X8R6000 CAPACITOR VALVO 2222 63051 64051103	CC 087.7525	300.5092
C102	CC 10NF-20+50%7X8R6000 CAPACITOR VALVO 2222 63051 64051103	CC 087.7525	300.5092
C106	CE 100UF-10+50% 25V 13X13 ELECTROLYTIC CAPACITOR ROEDERST ELKOEK100/25	CE 208.4007	300.5092

Kennzeichen Component No.	Benennung/Beschreibung Designation	Sachnummer Stock No.	enthalten in contained in
C108	CC 390PF+-10%3X4R2000 CAPACITOR VALVO 2222 63051 391	CC 087.6987	300.5092
C120	CC 22PF+-2%4X5NP0 CAPACITOR VALVO 2222 678 10229	CC 087.6464	300.5092
C121	CC 22PF+-2%4X5NP0 CAPACITOR VALVO 2222 678 10229	CC 087.6464	300.5092
C122	CC 22PF+-2%4X5NP0 CAPACITOR VALVO 2222 678 10229	CC 087.6464	300.5092
C176	CE 100UF-10+50% 25V 13X13 ELECTROLYTIC CAPACITOR ROEDERST ELKOEK100/25	CE 208.4007	300.5092
D1	LD 35DB/200M-10GHZ PI-FIL CHOKE ERIE 1214-038	LD 300.6818	300.5592
BIS/TO D17			
GL1	AD 1N4448 75V 0,15A UDI DIODE VALVO 1N4448	AD 012.0700	300.5092
GL51	AE 5082-2800 SCHOTTKYDI DIODE HEWLETT-P. 5082-2800	AE 012.9066	300.5092
BIS/TO GL54			
GL60	AE 5082-2800 SCHOTTKYDI DIODE HEWLETT-P. 5082-2800	AE 012.9066	300.5092
GL61	AE 5082-2800 SCHOTTKYDI DIODE HEWLETT-P. 5082-2800	AE 012.9066	300.5092
K1	DX KABEL K1 CABLE	356.0621	300.5092
K2	DX KABEL K2 CABLE	356.0638	
L20	LD 120 UH10%13,00HM0,066A CHOKE DELEVAN DROSSEL1025-70	LD 067.3118	300.5092
L21	LD 10,0UH10%3,300HM0,144A CHOKE DELEVAN DROSSEL1025-44	LD 026.4184	300.5092
L30	LF 200UH SCHALENK.RD9X5 FERRIT POT CORE	300.9823	300.5092
MP1	VL WIRE-WRAP PIN BERG NR. 75 403-001	VL 088.4507	300.5092
MP7	VL WIRE-WRAP PIN BERG NR. 75 403-001	VL 088.4507	300.5092

Für diese Unterlage behalten wir uns alle Rechte vor

Kennzeichen Component No.	Benennung/Beschreibung Designation	Sachnummer Stock No.	enthalten in contained in
BIS/TO			
MP11			
MP20	VL WIRE-WRAP PIN BERG NR. 75 403-001	VL 088.4507	300.5092
MP21	VL WIRE-WRAP PIN BERG NR. 75 403-001	VL 088.4507	300.5092
MP22	VL WIRE-WRAP PIN BERG NR. 75 403-001	VL 088.4507	300.5092
MP30	VL WIRE-WRAP PIN BERG NR. 75 403-001	VL 088.4507	300.5092
MP31	VL WIRE-WRAP PIN BERG NR. 75 403-001	VL 088.4507	300.5092
MP40	VL WIRE-WRAP PIN BERG NR. 75 403-001	VL 088.4507	300.5092
MP50	VL WIRE-WRAP PIN BERG NR. 75 403-001	VL 088.4507	300.5092
MP60	VL WIRE-WRAP PIN BERG NR. 75 403-001	VL 088.4507	300.5092
R19	RF 0,25W 1,8 OHM +-5% RESISTOR DRALORIC LCA0207/+-5%1,8	073.9937	300.5092
R20	RL 0,35W 1,50KOHM+-1%TK50 RESISTOR DRALORIC SMA0207/1,50K-F-D	RL 083.0732	300.5092
R21	RL 0,35W 150 OHM+-1%TK50 RESISTOR DRALORIC SMA0207/150OHM-F-D	RL 082.9942	300.5092
R22	RL 0,35W 150 KOHM+-1%TK50 RESISTOR DRALORIC SMA/207/150K-F-C	RL 083.2129	300.5092
R23	RS 0,5W2KOHM+-10%10X10X5 CERMET POTENTIOMETER T BOURNS 3386F-1-202	RS 247.7884	300.5092
R24	RS 0,5W2KOHM+-10%10X10X5 CERMET POTENTIOMETER T BOURNS 3386F-1-202	RS 247.7884	300.5092
R25	RL 0,35W 221 OHM+-1%TK50 RESISTOR DRALORIC SMA0207/2210HM-F-D	RL 083.0084	300.5092
R26	RL 0,35W 27,4KOHM+-1%TK50 RESISTOR DRALORIC SMA 0207/27,4K-F-C	RL 082.2583	300.5092
R27	RL 0,35W 1,30KOHM+-1%TK50 RESISTOR DRALORIC SMA0207/1,30K-F-D	RL 083.0678	300.5092
R28	RL 0,35W 681 OHM+-1%TK50 RESISTOR DRALORIC SMA0207/6810HM-F-D	RL 083.0490	300.5092
R29	RL 0,35W 10,0 OHM+-1%TK50 RESISTOR DRALORIC SMA0207/100HM-F-D	RL 082.8852	300.5092
R30	RL 0,35W 10,0 OHM+-1%TK50 RESISTOR DRALORIC SMA0207/100HM-F-D	RL 082.8852	300.5092

Kennzeichen Component No.	Benennung/Beschreibung Designation	Sachnummer Stock No.	enthalten in contained in
R40	RL 0,35W 1,1KOHM+-1%TK50 RESISTOR DRALORIC SMA 0207/1,10K-F-C	RL 082.2483	300.5092
R41	RL 0,35W 1,21KOHM+-1%TK50 RESISTOR DRALORIC SMA0207/1,21K-F-D	RL 083.0655	300.5092
R42	RL 0,35W 768 OHM+-1%TK50 RESISTOR DRALORIC SMA0207/768OHM-F-D	RL 083.0532	300.5092
R43	RL 0,35W 475 OHM+-1%TK50 RESISTOR DRALORIC SMA0207/475OHM-F-D	RL 083.0390	300.5092
R50	RL 0,35W3,01KOHM+-0,1%T25 RESISTOR DRALORIC SMA0207/3,01K-B-E	RL 084.2068	300.5092
R51	RL 0,35W9,09KOHM+-0,1%T25 RESISTOR DRALORIC SMA0207/9,09K-B-E	RL 084.2980	300.5092
R52	RL 0,35W 16,2KOHM+-1%TK50 RESISTOR DRALORIC SMA0207/16,2K-F-D	RL 083.1439	300.5092
R53	RS 0,5W5KOHM+-10%10X10X5 CERMET POTENTIOMETER T BOURNS 3386F-1-502	RS 247.7890	300.5092
R54	RL 0,35W 10,0KOHM+-1%TK50 RESISTOR DRALORIC SMA0207/10K-F-D	RL 083.1297	300.5092
R55	RL 0,35W3,01KOHM+-0,1%T25 RESISTOR DRALORIC SMA0207/3,01K-B-E	RL 084.2068	300.5092
R56	RL 0,35W 10,0 OHM+-1%TK50 RESISTOR DRALORIC SMA0207/100HM-F-D	RL 082.8852	300.5092
R57	RL 0,35W9,09KOHM+-0,1%T25 RESISTOR DRALORIC SMA0207/9,09K-B-E	RL 084.2980	300.5092
R60	RL 0,35W1,17KOHM+-0,1%T25 RESISTOR DRALORIC SMAC207/1,17K-B-E	RL 083.9275	300.5092
R61	RL 0,35W130 OHM+-0,1%TK25 RESISTOR DRALORIC 0207 130 OHM 0,1%	RL 083.7443	300.5092
R62	RL 0,35W35,2KOHM+-0,1%T25 RESISTOR DRALORIC 0207 35,2KOHM 0,1%	RL 084.4119	300.5092
R63	RL 0,35W25,8KOHM+-0,1%T25 RESISTOR DRALORIC 0207 25,8KOHM 0,1%	RL 084.3858	300.5092
R70	RL 0,35W 30,1KOHM+-1%TK50 RESISTOR DRALORIC SMA0207/30,1K-F-C	RL 083.1639	300.5092
R71	RL 0,35W 20,0KOHM+-1%TK50 RESISTOR DRALORIC SMA/207/20K-F-C	RL 083.1522	300.5092
R72	RL 0,35W 8,45KOHM+-1%TK50 RESISTOR DRALORIC SMA0207/8,45K-F-D	RL 083.1245	300.5092

Für diese Unterlage behalten wir uns alle Rechte vor

Kennzeichen Component No.	Benennung/Beschreibung Designation	Sachnummer Stock No.	enthalten in contained in
R73	RL 0,35W21,5KOHM+-1%TK50 RESISTOR DRALORIC SMA0207/21,5K-F-C	RL 082.1741	300.5092
R74	RS 0,5W20KOHM+-10%10X10X5 CERMET POTENTIOMETER T BOURNS 3386F-1-203	RS 087.7577	300.5092
R75	RL 0,35W 221 KOHM+-1%TK50 RESISTOR DRALORIC SMA0207/221K-F-C	RL 083.2270	300.5092
R76	RL 0,35W 604 OHM+-1%TK50 RESISTOR DRALORIC SMA/207/6040HM-F-C	RL 082.2425	300.5092
R77	RL 0,35W3,16KOHM+-0,1%T25 RESISTOR DRALORIC 0207 3,16KOHM 0,1%	RL 084.2100	300.5092
R78	RL 0,35W1,58KOHM+-0,1%T25 RESISTOR DRALORIC 0207 1,58KOHM 0,1%	RL 083.9523	300.5092
R79	RL 0,35W 8,25KOHM+-1%TK50 RESISTOR DRALORIC SMA0207/8,25K-F-D	RL 083.1239	300.5092
R80	RL 0,35W13,7KOHM+-1%TK50 RESISTOR DRALORIC SMA0207/13,7K-F-D	RL 082.6608	300.5092
R81	RL 0,35W82,5KOHM+-0,1%T25 RESISTOR DRALORIC SMA0207/82,5K-B-E	RL 084.4825	300.5092
R83	RL 0,35W 475 KOHM+-1%TK50 RESISTOR DRALORIC SMA/207/475K-F-C	RL 083.2593	300.5092
R84	RL 0,35W 475 KOHM+-1%TK50 RESISTOR DRALORIC SMA/207/475K-F-C	RL 083.2593	300.5092
R85	RL 0,35W2,05KOHM+-0,1%T25 RESISTOR DRALORIC SMA/207/2,05K-B-E	RL 083.9746	300.5092
R86	RL 0,35W120 OHM+-0,1%TK25 RESISTOR DRALORIC SMA0207/1200HM-B-E	RL 083.7372	300.5092
R87	RL 0,35W7,77KOHM+-0,1%T25 RESISTOR DRALORIC 0207 7,77KOHM 0,1%	RL 084.2851	300.5092
R90	RL 0,35W 1MOHM+-1%TK50 RESISTOR DRALORIC SMA0207/1M-F-D	RL 082.7862	300.5092
R92	RL 0,35W3,16KOHM+-0,1%T25 RESISTOR DRALORIC 0207 3,16KOHM 0,1%	RL 084.2100	300.5092
R93	RL 0,35W1,58KOHM+-0,1%T25 RESISTOR DRALORIC 0207 1,58KOHM 0,1%	RL 083.9523	300.5092
R94	RL 0,35W 47,5KOHM+-1%TK50 RESISTOR DRALORIC SMA/207/47,5K-F-C	RL 083.1800	300.5092
R96	RL 0,35W 475 KOHM+-1%TK50 RESISTOR DRALORIC SMA/207/475K-F-C	RL 083.2593	300.5092

Kennzeichen Component No.	Benennung/Beschreibung Designation	Sachnummer Stock No.	enthalten in contained in
R97	RL 0,35W 475 KOHM+-1%TK50 RESISTOR DRALORIC SMA/207/475K-F-C	RL 083.2593	300.5092
R100	RL 0,35W604 OHM+-0,1%TK25 RESISTOR DRALORIC 0207 604 OHM 0,1%	RL 083.8727	300.5092
R101	RL 0,35W604 OHM+-0,1%TK25 RESISTOR DRALORIC 0207 604 OHM 0,1%	RL 083.8727	300.5092
R102	RL 0,35W1,58KOHM+-0,1%T25 RESISTOR DRALORIC 0207 1,58KOHM 0,1%	RL 083.9523	300.5092
R103	RL 0,35W1,58KOHM+-0,1%T25 RESISTOR DRALORIC 0207 1,58KOHM 0,1%	RL 083.9523	300.5092
R104	RL 0,35W604 OHM+-0,1%TK25 RESISTOR DRALORIC 0207 604 OHM 0,1%	RL 083.8727	300.5092
R105	RL 0,35W 15,0KOHM+-1%TK50 RESISTOR DRALORIC SMA0207/15K-F-D	RL 083.1400	300.5092
R108	RL 0,35W 82,5KOHM+-1%TK50 RESISTOR DRALORIC SMA0207/82,5K-F-C	RL 082.2302	300.5092
RS1	SR 5 V 1XU DIL RELAY SIEMENS V23100-V4305-C000	SR 340.4551	300.5092
ST1	FP EINZELKONTAKTSTIFT SINGLE-CONTACT PIN ULMIC R&S.ZCHNG.300.8804	300.8804	300.5592
BIS/TO ST17 ST60	ENTHALTEN IN/INCLUDED IN LEITERPLATTE/PCB		300.5592
T20	AK 2N5109 NPN 20V 400MA TRANSISTOR RCA 2N5109	AK 010.0761	300.5092
T100	AK BCY59IX NPN 45V 200MA TRANSISTOR SIEMENS BCY59IX	AK 010.5163	300.5092
			- ENDE -

Für diese Unterlage behalten wir uns alle Rechte vor

ST60.4 ST4 D4 STROBE NF4 BU4 B51 SN74LS273 B50 SN74LS273 ST60.7 ST2 D2 STROBE NF5 BU2 B52 SN74LS125 B53 SN74LS122 ST60.2 D5 ST5 BU5 STROBE NF3 R108 82k C108 390 C102 10n C101 10n C100 1µ B55.2 B60.2 R105

BU8 ST8 D8 ST60.12 +14V -14V C22 100µ

ST60.6 ST3 D3 BU3 C59 100µ C106 100µ

B40 SE5534 C120 22 C60 10n C61 10n

B41 AD7520KN MSB LSB V_{ref} C62 10n C63 10n

B43 TL191 C64 10n C65 10n C70 10n C72 10n C71 1µ R60 1,17k R61 130

B42 SE5534

B45 AD581 C68 10n R62 35,2k R63 25,8k +10V

B44 SE5534 C121 22 C67 10n C66 10n C69 100µ

B61I B61II B61III B61IV LM124 R87 7,77k R86 120 R85 2,05k C87 10n

MP50

B57 LF256 R70 30,1k GL51 HPA5082-2800 GL54 HPA5082-2800 C77 10n R74 20k C78 10n R71 20k R72 8,45k R73 21,5k R79 8,25k R80 13,7k

B59 SE5534 R81 82,5k GL53 HPA5082-2800 GL52 HPA5082-2800 C82 10n C83 10n C86 100µ R84 475k R83 475k

B21 LF256 R20 1,5k C26 10n C27 10n MP20

B30 HA2525 R40 1,1k R41 1,21k C41 3,9n C43 10n C40 1,2n R42 768 C47 2-24 C42 150 C44 10n

B23 LM218 C29 10n C28 220 C30 10n R22 150k MP21

MP30 L30 200µ C45 120 R43 470

B51.12 B55 TL604 C74 10n C73 1µ C75 10n C122 22 B56 SE5534 C76 10n C176 100µ K2 K1

B51.15 B60 TL604 C79 0,47µ C84 10n C85 10n R75 220k C80 10n C81 10n R77 3,16k R78 1,58k B58 LF256 R76 604

AM-NF ALC BU66 zum/To AM-Modulator

AM/ALC ext. $1V_{eff}$ ±3% BU64 von Frontplatte From front panel

B51.19 T100 BCY59IX R105 15k

B64 LF256 R90 1M C90 0,1µ C91 10n R92 3,16k C92 10n R93 1,58k

B65 SE5534 C98 10n R94 47,5k GL61 HPA5082-2800 GL60 HPA5082-2800 R97 475k R96 475k C96 100µ C99 10n C97 100µ MP60

B66II R103 1,58k R102 1,58k

BU61 zur FM-Stufe To FM stage

ST60. A-E, H-K, M, P, S-Z

Platte NF-Generator und Eichleitung PcB NF-generator and attenuator	300.5092
Platte Zuführung NF-Generator PcB feed NF-generator	300.5592

B45 Draufsicht Top view

B21,B23 B30,B57 B58,B64 Draufsicht Top view

B5,B36 B40,B42,B44 B55,B56,B59 B60,B65,B66 Draufsicht Top view

B12,B13,B52 B53,B61 Draufsicht Top view

B7,B8,B9 B10,B11,B22 B38,B41,B43 Draufsicht Top view

B1.....B6 B16,B17 B50,B51 Draufsicht Top view

B14,B15 Draufsicht Top view

RS1 Draufsicht Top view

B20 Draufsicht Top view

T20,T100

Stromlauf zu	NF-Generator und Eichleitung NF generator and attenuator	Z	Zeichn.-Nr. 300.3819 S
	reg. i. V 300.1000 V	erste Z. 300.1000	Blatt-Nr. v. Bl.

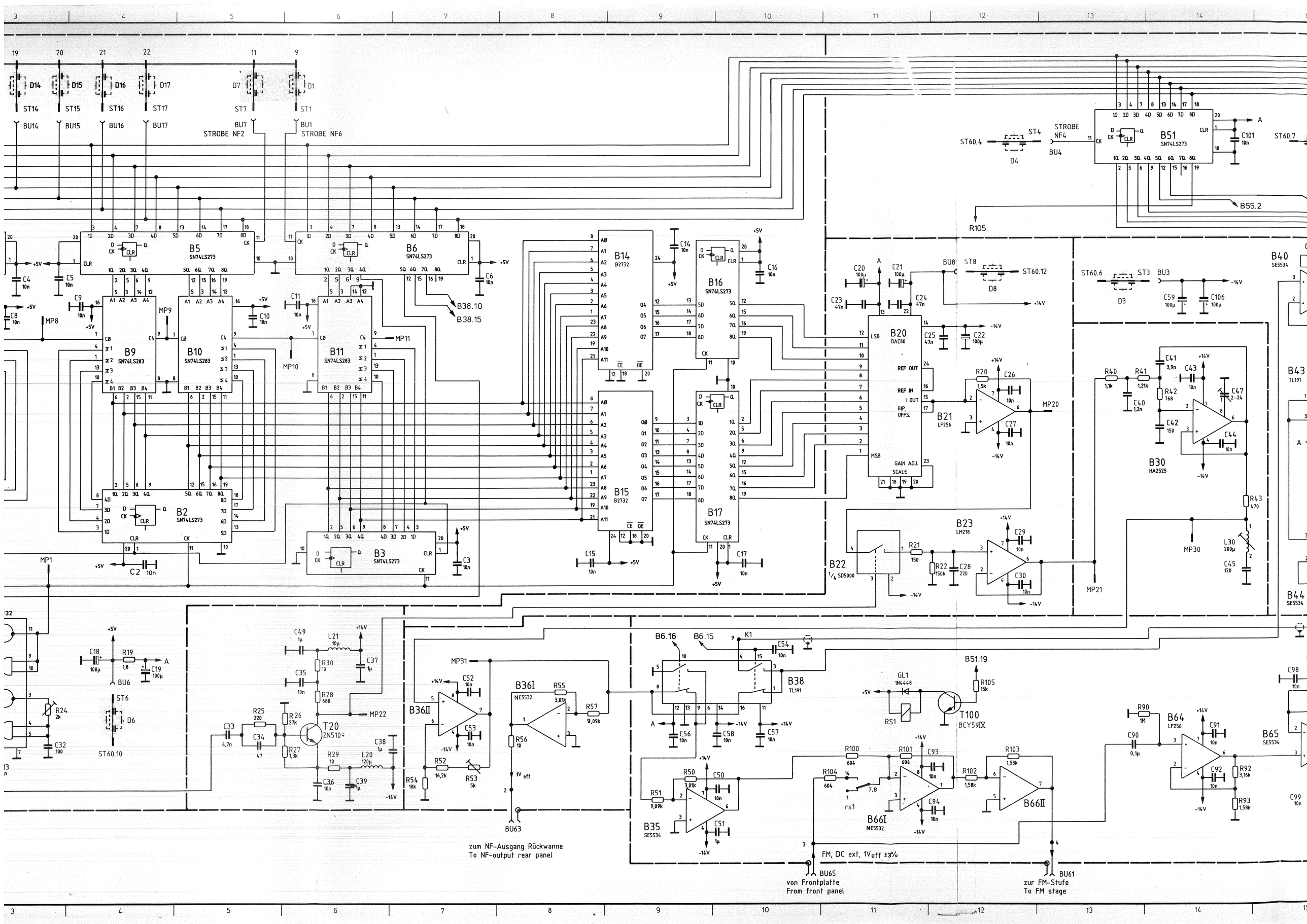

B5 SN74LS273
B6 SN74LS273
B9 SN74LS283
B10 SN74LS283
B11 SN74LS283
B2 SN74LS273
B3 SN74LS273
B14 B2732
B15 B2732
B16 SN74LS273
B17 SN74LS273
B20 DAC80
B21 LF256
B22 1/4 SD5000
B23 LM218
B30 HA2525
B51 SN74LS273
B40 SE5534
B43 TL191
B44 SE5534
B38 TL191
B35 SE5534
B36I NE5532
B36II
B66I NE5532
B66II
B64 LF256
B65 SE5534
T20 2N5109
T100 BCY59IX
GL1 1N4448
RS1
STROBE NF2
STROBE NF6
STROBE NF4
zum NF-Ausgang Rückwanne
To NF-output rear panel
FM, DC ext, 1Veff ±3%
BU65
von Frontplatte
From front panel
BU61
zur FM-Stufe
To FM stage

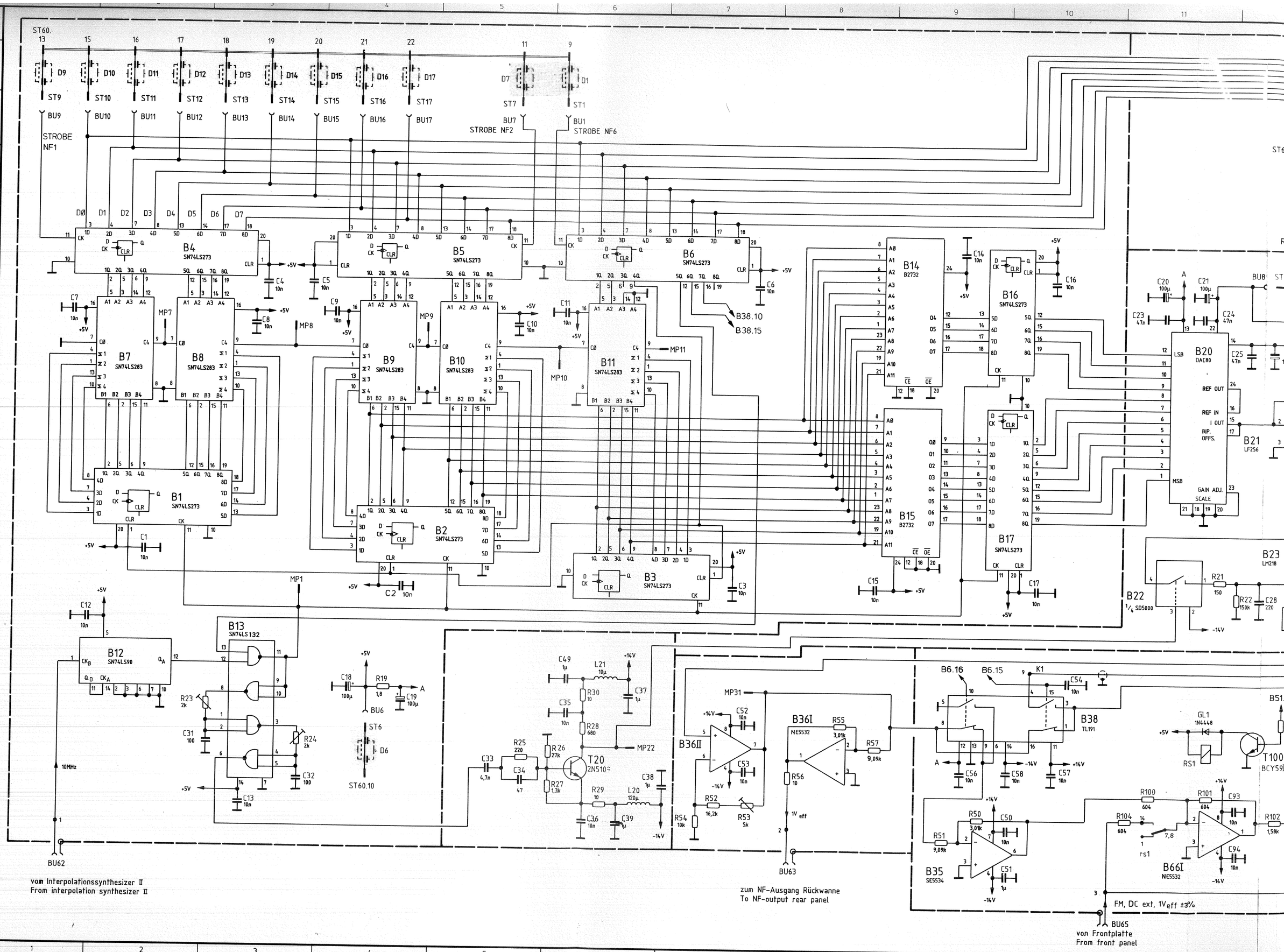

Zeichn.-Nr.	200.3819 S						
	Datum	Name	Änd.-Zust.	Änd. Mittlg. Nr.	Datum	Name	
1KGA			F	—	13.7.82	ls	
gezeichnet	7.82	gu	G	27860	11.82	LS	
bearbeitet	7.82	ls	H	31057	11.83	LS	
geprüft			J	32288	11.84	GS	
normgepr.							

Für diese Zeichnung behalten wir uns alle Rechte vor.

ROHDE&SCHWARZ

PFO 95.3531-0379

Für diese Unterlage behalten wir uns alle Rechte vor.

Ansicht und Leitungsführung Bauteilseite
View of tracks on component side

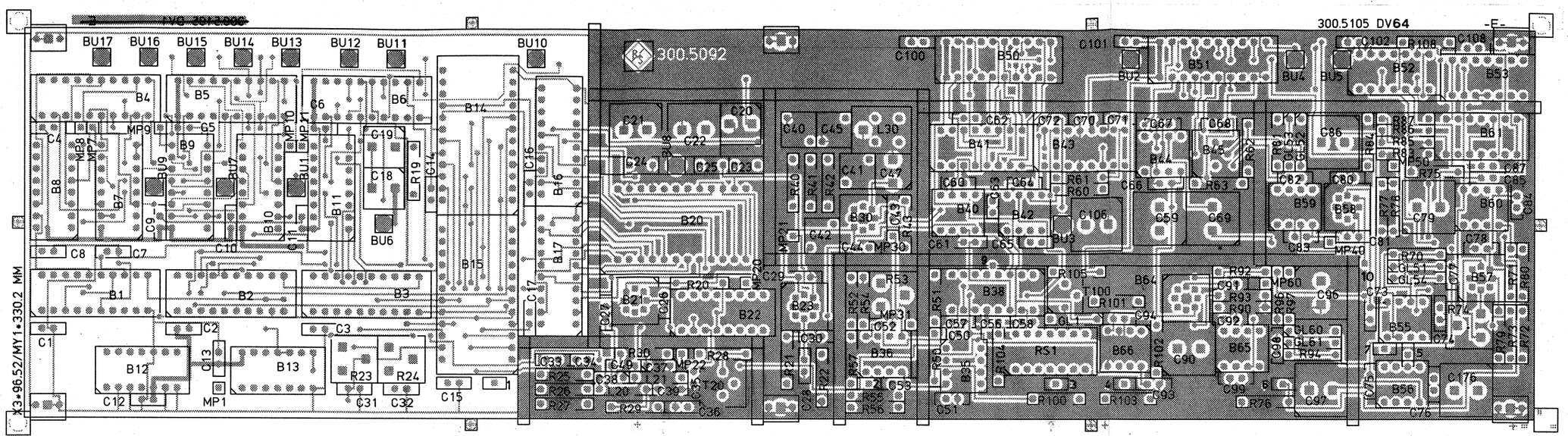

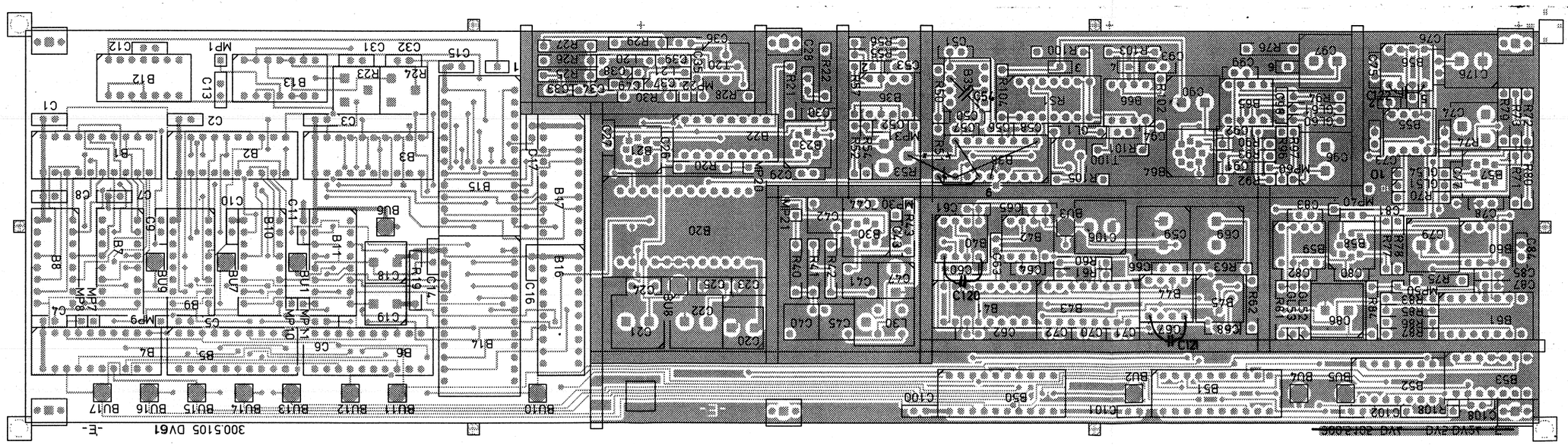

Symbolschlussel

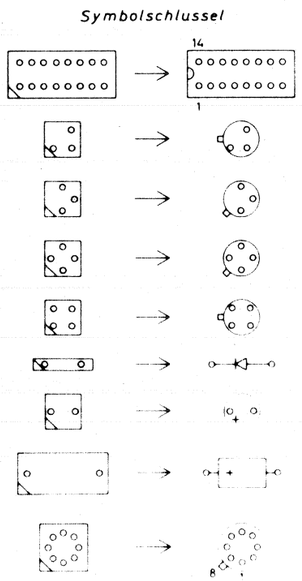

ISO-Projektion
Methode E

Ansicht und Leitungsführung Lötseite
View of tracks on solder side

Achtung! MOS-Bauteile
Caution. MOS components

E	27860	6.82	LS	Maße ohne Toleranzangabe		Maßstab 1 : 1	
F	27860	11.82	LS			Halbzeug, Werkstoff	
G	32288	11.84	GS				
				1GM	Tag	Name	Benennung
				Bearb.	6.82	LS	NF-GENERATOR UND EICHLEITUNG
				Gepr.			NF-Generator and attenuator
				Norm			Z
Änd. Zust.	Änderungs-Mitteilung	Tag	Name	ROHDE & SCHWARZ		Zeichn.-Nr 300.5092	Blatt-Nr 2
				zu Gerät SMPC		reg. Nr. 300.1000V	erste Z 300.3819

Ansicht und Leitungsführung Bauteilseite
View of tracks on component side

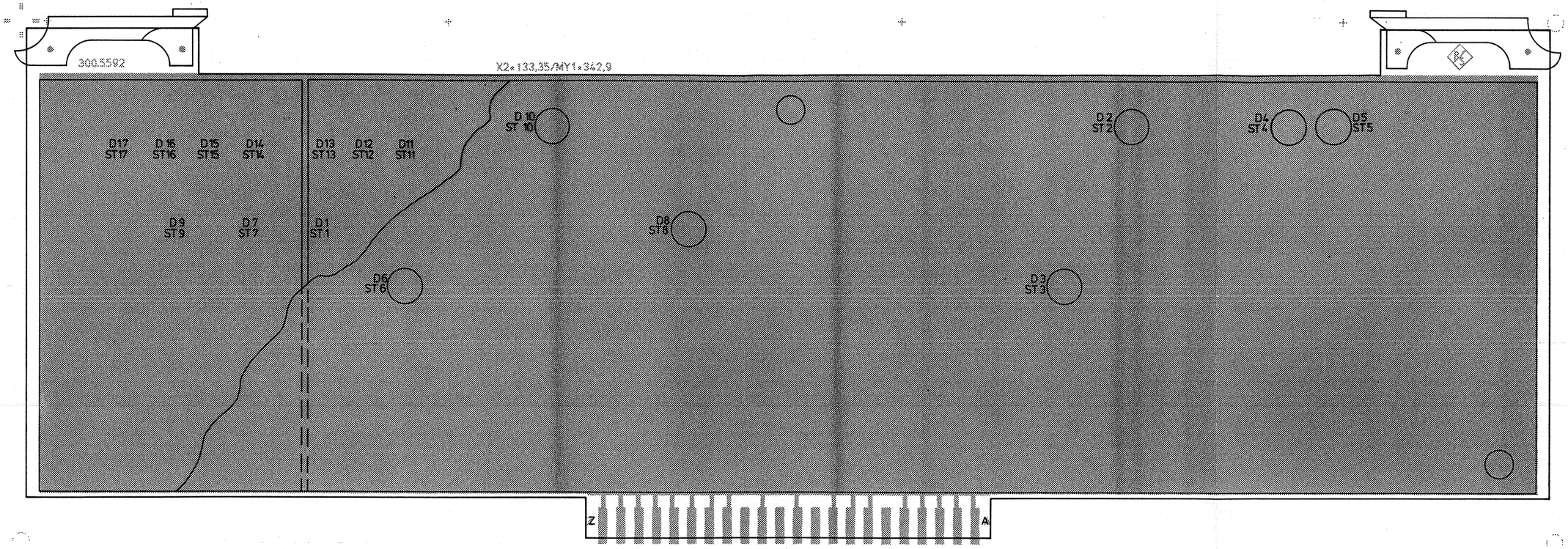

Für diese Unterlage behalten wir uns alle Rechte vor

ISO-Projektion Methode E

D	———	27.1.82	LS	Maße ohne Toleranzangabe		Maßstab 1 : 1	
						Halbzeug, Werkstoff	
				1GMS	Tag	Name	Benennung
				Bearb	27.1.82	LS	Zuführ. NF-Gen.+Eichl. / Feed NF-Gen. + Attenuator — Z
				Gepr			
				Norm			
				ROHDE & SCHWARZ			Zeichn.-Nr 300.5592 — Blatt-Nr 2
And.	Änderungs-Mitteilung	Tag	Name	zu Gerät SMPC			reg. V 300.1000 V — erste Z 300.3819 — v BI

PF 095.2493.0781 — 07 6001 81

Ansicht und Leitungsführung Lötseite
View of tracks on solder side

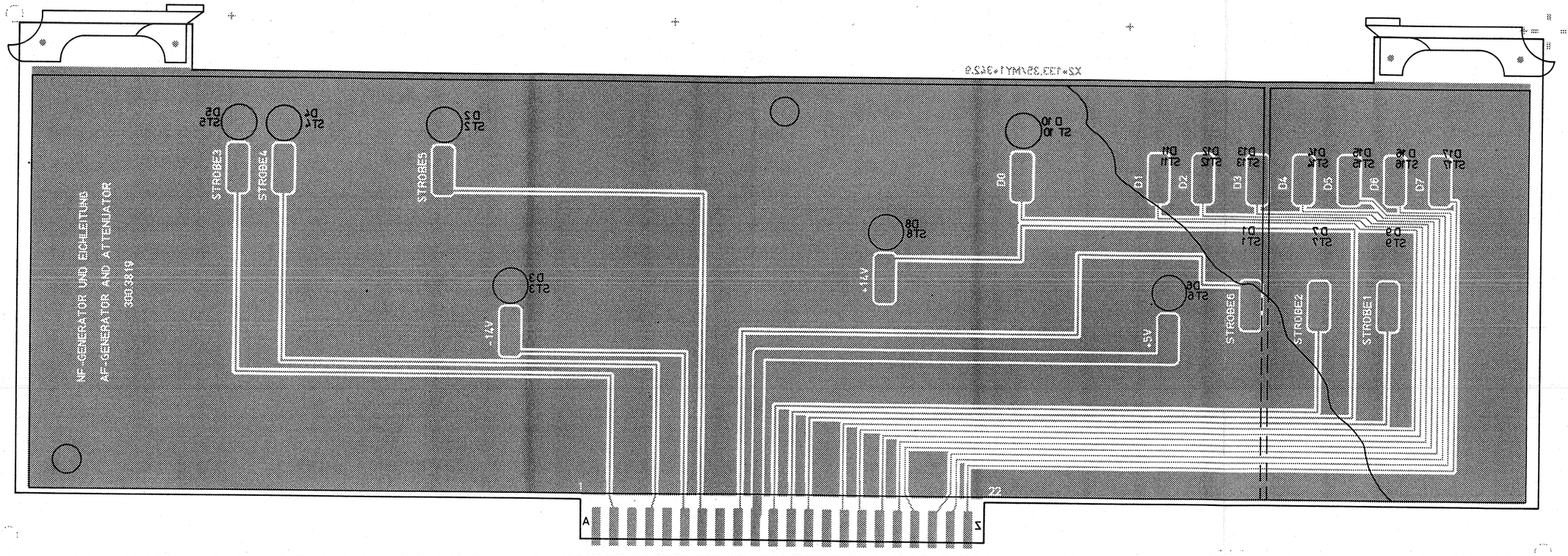

D		27.1.82	LS	Maße ohne Toleranzangabe		Maßstab 1 : 1	
						Halbzeug, Werkstoff	
				1GME	Tag / Name	Benennung	
				Bearb	27.1.82 LS	Zuführ. NF-Gen.+ Eichl,	Z
				Gepr		Feed NF-Gen. + Attenuator	
				Norm			
				ROHDE & SCHWARZ		Zeichn.-Nr 300.5592	Blatt-Nr 3
And. Zust.	Änderungs-Mitteilung	Tag	Name	zu Gerät SMPC		reg. Nr. 300.1000V	erste Z. 300.3819

Für diese Unterlage behalten wir uns alle Rechte vor

ISO Projektion Methode E

ROHDE&SCHWARZ

SERVICE INSTRUCTIONS FOR

Interpolation Synthesizer I

300.2812 (Y4)

Table of Contents

		Page
5	Service Instructions for Interpolation Synthesizer I 300.2812 (Y4)	5.1
5.1	Circuit Description	5.1
5.1.1	Digital Synthesizer	5.1
5.1.2	Analog Section	5.1
5.2	Checking and Adjustment Procedures	5.2
5.2.1	Adjustment of the Mixer Symmetry	5.2
5.2.2	Setting the Output Level	5.2
5.2.3	Checking the Digital Adder	5.2
5.2.4	Checking the Non-harmonic Spurious Signals	5.4
5.2.4.1	Non-harmonic Spurious Mixer Signals	5.4
5.2.4.2	Non-harmonic Spurious Synthesizer Signals	5.4
5.3	Troubleshooting	5.5
5.3.1	Interfaces	5.6

Parts list
Circuit diagram
Components location plans

5 Service Instructions for Interpolation Synthesizer I 300.2812 (Y4)

5.1 Circuit Description

(See circuit diagram 300.2812 S and Fig. 5-1)

Y4 contains a digital synthesizer which delivers a frequency of 200 to 300 kHz with a resolution of 1.2 MHz. Two mixers convert this frequency to 12.2 to 12.3 MHz. This signal is added to the interpolation oscillator III control loop where it produces the fine resolution of the 240-to-247-MHz signal.

5.1.1 Digital Synthesizer

Increment I which is added in a 32-bit adder with a clock of 5 MHz derived from the 10-MHz reference frequency is calculated in the processor Y1 and stored in the latches B9, B13, B17 and B21. The most significant bit of the sum switches an inverter made up of exclusive OR gates.

As long as this bit is low, an ascending series of figures is obtained after the inverter. When this sum reaches $2^{32}/2$ in the adder, the bit goes high. A descending series of figures is then obtained after the inverter.

This series of figures is converted in a 12-bit D/A converter into a triangular function the frequency f_T of which is determined by the increment I according to the formula

$$I = \frac{f_T/\mathrm{Hz}}{5 \times 10^6} \cdot 2^{32}.$$

Since the summation of the increment does not normally go into the maximum value $2^{32}/2$ the triangular voltage at the output of the D/A converter exhibits amplitude and phase fluctuations. The carry being reused in the continuous summation and averaging over many periods brings about the high setting accuracy.

5.1.2 Analog Section

A sample circuit following the D/A converter suppresses interference pulses. After filtering in a lowpass filter and amplification the signal is applied to a comparator which suppresses the spurious AM. The 200-to-300-kHz signal is mixed with 2 and 10 MHz in two mixers to obtain 12.2 to 12.3 MHz. An amplifier with two transistors (T4, T5) boosts the output level to -3 dBm.

5.2 Checking and Adjustment Procedures

5.2.1 Adjustment of the Mixer Symmetry

Setup on Y4:

→ Connect spectrum analyzer to BU73.

Set frequency of 240.050 MHz on the XPC/SMPC and adjust R16 for minimum amplitude of the 250-kHz side lines of the 12.25-MHz signal. The non-harmonic spurious signals must be < -70 dBc.

5.2.2 Setting the Output Level

Setup on Y4 as under 5.2.1.

Set the output power at BU73 to -3 ±1 dBm at a frequency of 240.050 MHz.

5.2.3 Checking the Digital Adder

The individual bits of the increment can be set with the aid of the test EPROM provided on the processor board Y1 permitting the function of the digital adder to be checked.

Setup on Y1:

→ Replace B10 by test EPROM Id.No. 337.9904
(incl. in Service Kit XPC-Z1)

→ Switch on the XPC/SMPC.

At switch-on the selected IEC-bus address is displayed on the XPC/SMPC. By pressing the key

RF Hz

the interpolation synthesizer I test is called up.
The display reads

INT_I 0 0

bit n (0 to 27)

0: all bits are low
1: selected bit goes high

Now the following entries can be made:

0

.
.
.

corresponding to bit n

2	7

[+] a) First stroke: selected bit n goes high and the data word is output.

b) Next stroke: n is incremented and the new data word is output.

[-] a) First stroke: same as with [+]

b) Next stroke: n is decremented and the data word is output.

[C] n is reset to Ø and the data word is output with all bits being reset to Ø.

Bit Ø now goes high. A pulse train with a period of 3.2 µs can then be measured at B7.9 by means of an oscilloscope. Subsequently n is incremented to between 1 and 3 and each time the period at B7.9 is halved. When bit 3 is set, a pulse train with a period of 6.4 µs must be present at B8.9 (overflow of the adder B7 to B8).

This procedure is performed accordingly for all other adders:

Adder	n
B7	Ø - 3
B8	4 - 7
B11	8 - 11
B12	12 - 15
B15	16 - 19
B16	20 - 23
B19	24 - 27

5.2.4 Checking the Non-harmonic Spurious Signals

5.2.4.1 Non-harmonic Spurious Mixer Signals

Setup on Y4:

→ Connect spectrum analyzer to BU73.

Switch on XPC/SMPC and vary frequency between 240.0 and 240.1 MHz. The output frequency of the interpolation synthesizer I is then 12.2 to 12.3 MHz. The non-harmonic spurious signals must be ≤ -70 dBc at the following search frequencies:

10 MHz,
7.7 to 7.8 MHz
12.8 to 12.7 MHz
12.2 to 12.3 MHz $\pm f_T$, 2 f_T, 3 f_T, 4 f_T

(f_T: 200 to 300 kHz)

5.2.4.2 Non-harmonic Spurious Synthesizer Signals

Set the following frequencies on the XPC/SMPC. Then detune the frequency first by 1 Hz and then by 20 Hz. Check the non-harmonic spurious signals by means of the spectrum analyzer (span 2 kHz). It must be ≤-70 dBc at all frequencies.

f XPC/MHz
240.008 333
240.017 391
240.027 273
240.038 095
240.050 000
240.063 158
240.077 778
240.094 118

5.3 Troubleshooting

(For signature analysis see Processor Board Y1)

Errors in the digital section can be located according to 5.2.3. The analog section can be checked at the following test points starting from the D/A converter.

$$f_{XPC} = 240.050 \text{ MHz}$$

Measure by means of oscilloscope, 10:1 probe, C_i max 15 pF.

Test point	Frequency	Amplitude	Shape of curve
R5	250 kHz	0.6 ±0.1 V_{pp}	Triangular, superimposed 5-MHz spikes
Coll. T101	5 MHz	0/-14 V_{pp}	Rectangular
R11	250 kHz	7 ±1 V_{pp}	Sinusoidal
ST21	250 kHz	1.75 ±0.3 V_{pp}	Sinusoidal
R27 - C59	2 MHz	1.2 ±0.2 V_{pp}	Sinusoidal
ST22	2.25 MHz	2.5 ±0.5 V_{pp}	Sinusoidal
ST23	2.25 MHz	1 ±0.2 V_{pp}	Sinusoidal
R31 - C83	10 MHz	0.4 ±0.1 V_{pp}	Sinusoidal
BU73	12.25 MHz	280 to 630 mV_{pp}	Sinusoidal with 50 Ω load

5.3.1 Interfaces

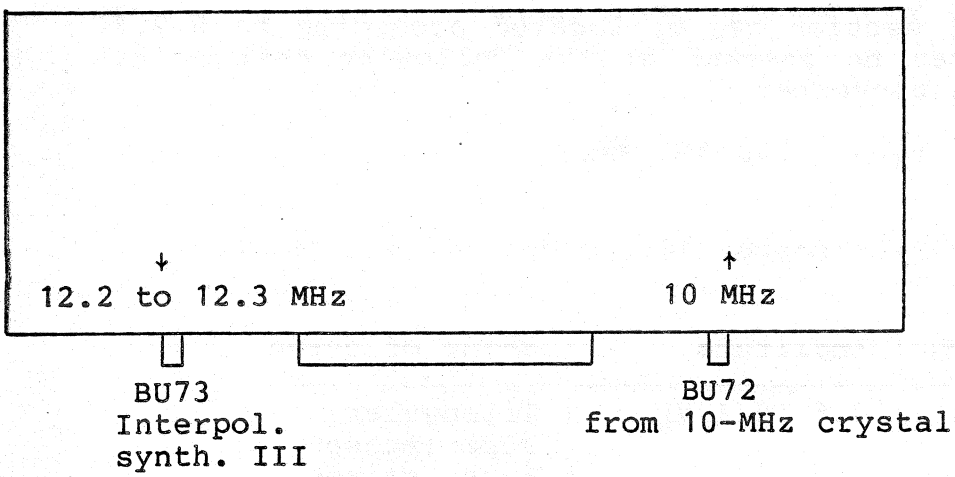

St/BU	72	73
f	10 MHz	12.2 to 12.3 MHz
Level	2 ±0.2 V_{ss}	-3 ±1 dBm
Z	220 Ω	50 Ω
AC-DC	AC	AC
Shape of curve	rectangular	sinusoidal

Digital interface

Four strobes, data: increment I is transferred in binary with 28-bit resolution.

Data bus	D7 ST 70.22	D6 ST 70.21	D5 ST 70.20	D4 ST 70.19	D3 ST 70.18	D2 ST 70.17	D1 ST 70.16	DØ ST 70.15
Strobe 1 ST 70.13	X	X	X	X	MSB	-	-	-
Strobe 2 ST 70.5	-	-	-	-	-	-	-	-
Strobe 3 ST 70.4	-	-	-	-	-	-	-	-
Strobe 4 ST 70.3	-	-	-	-	-	-	-	LSB

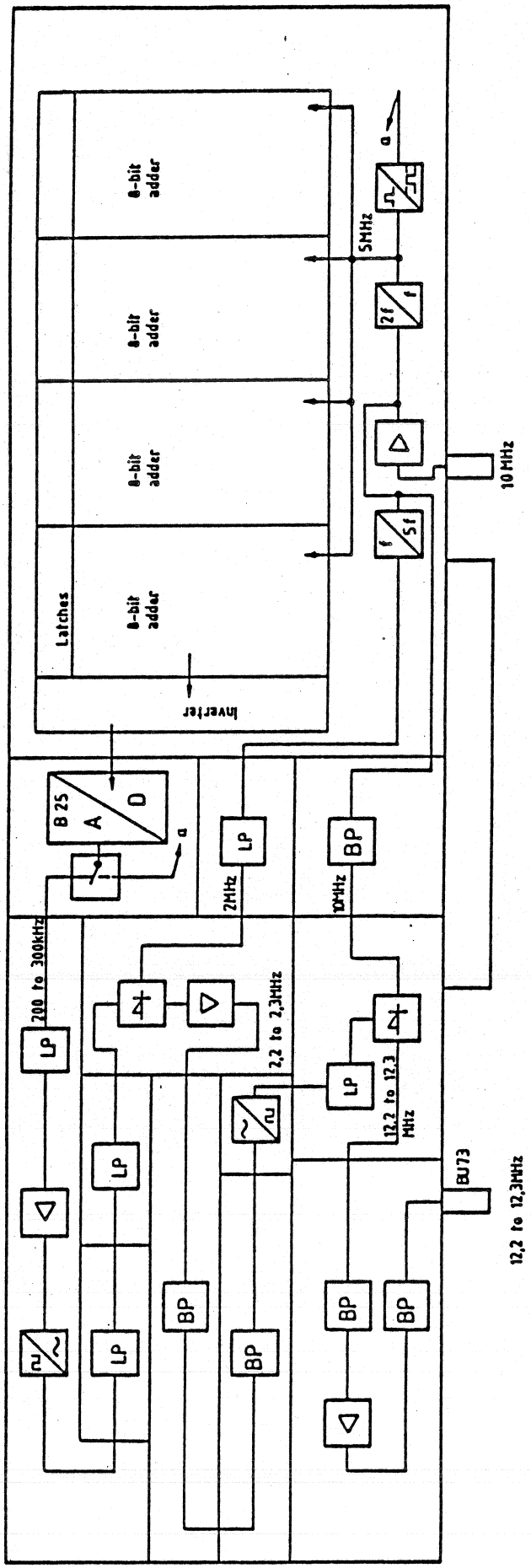

Fig. 5-1 Block diagram of interpolation synthesizer I

ROHDE & SCHWARZ
MÜNCHEN

Schaltteillisten
Stromläufe
Bestückungspläne

Parts lists
Circuit diagrams
Components plans

R 29500 Bl. 2

Kennzeichen Component No.	Benennung/Beschreibung Designation	Sachnummer Stock No.	enthalten in contained in
B3	BL SN74LS107AN 2/JK-FLIPF IC FLIP-FLOP SN74LS107AN TEXAS SN74LS107AN	300.6453	300.5111
B4	BL SN74LS00N 4/2INP.NAND IC NAND GATE SN74LS00N	266.4641	300.5111
B5	BL SN74LS290N DEC.COUNTER IC DECADE COUNTER SN74LS2 TEXAS SN74LS290N	300.6447	300.5111
B6	BL SN74LS273N 8BIT-D-REG. 8BIT-D-REGISTER TEXAS SN74LS273N	214.8998	300.5111
B7	BL SN74LS283N 4-BIT-ADD. IC SN74LS283N 4-BIT-ADD. TEXAS SN74LS283N	283.1760	300.5111
B8	BL SN74LS283N 4-BIT-ADD. IC SN74LS283N 4-BIT-ADD. TEXAS SN74LS283N	283.1760	300.5111
B9	BL SN74LS273N 8BIT-D-REG. 8BIT-D-REGISTER TEXAS SN74LS273N	214.8998	300.5111
B10	BL SN74LS273N 8BIT-D-REG. 8BIT-D-REGISTER TEXAS SN74LS273N	214.8998	300.5111
B11	BL SN74LS283N 4-BIT-ADD. IC SN74LS283N 4-BIT-ADD. TEXAS SN74LS283N	283.1760	300.5111
B12	BL SN74LS283N 4-BIT-ADD. IC SN74LS283N 4-BIT-ADD. TEXAS SN74LS283N	283.1760	300.5111
B13	BL SN74LS273N 8BIT-D-REG. 8BIT-D-REGISTER TEXAS SN74LS273N	214.8998	300.5111
B14	BL SN74LS273N 8BIT-D-REG. 8BIT-D-REGISTER TEXAS SN74LS273N	214.8998	300.5111
B15	BL SN74LS283N 4-BIT-ADD. IC SN74LS283N 4-BIT-ADD. TEXAS SN74LS283N	283.1760	300.5111
B16	BL SN74LS283N 4-BIT-ADD. IC SN74LS283N 4-BIT-ADD. TEXAS SN74LS283N	283.1760	300.5111
B17	BL SN74LS273N 8BIT-D-REG. 8BIT-D-REGISTER TEXAS SN74LS273N	214.8998	300.5111
B18	BL SN74273N 8BIT-D-REGIST IC REGISTER SN74273N TEXAS SN74273N	335.8500	300.5111
B19	BL SN74LS283N 4-BIT-ADD. IC SN74LS283N 4-BIT-ADD. TEXAS SN74LS283N	283.1760	300.5111
B20	BL SN74LS283N 4-BIT-ADD. IC SN74LS283N 4-BIT-ADD. TEXAS SN74LS283N	283.1760	300.5111
B21	BL SN74LS273N 8BIT-D-REG. 8BIT-D-REGISTER TEXAS SN74LS273N	214.8998	300.5111

Für diese Unterlage behalten wir uns alle Rechte vor

Kennzeichen Component No.	Benennung/Beschreibung Designation	Sachnummer Stock No.	enthalten in contained in
B22	BL SN74LS86N EXOR-GATTER IC 74LS86N TEXAS SN74LS86N	235.8497	300.5111
BIS/TO B24			
B25	BJ DAC80CBII 12B.D/A-CONV D/A-CONVERTER BURR-BROWN DAC-80CBI-I	300.6330	300.5111
B26	BO LF157H BIFET OPAMP OPERATIONAL AMPLIFIER VALVO LF157H	BO 300.9352	300.5111
B27	BO LM206H COMPAR COMPARATOR AMD LM206H	300.6476	300.5111
B28	BO LM1596 MOD/DEMOD MODULATOR/DEMODULATOR NSC LM1596H	BO 417.0419	300.5111
B29	BO UA710HC DIFF COMPAR COMPARATOR NSC LM710C	009.1074	300.5111
B30	BO LM1596 MOD/DEMOD MODULATOR/DEMODULATOR NSC LM1596H	BO 417.0419	300.5111
BR6	FP KURZSCHLUSSBUCHSE SHORTING PLUG PK 452-70302	FP 491.7042	300.5111
BR10	FP KURZSCHLUSSBUCHSE SHORTING PLUG PK 452-70302	FP 491.7042	300.5111
BR14	FP KURZSCHLUSSBUCHSE SHORTING PLUG PK 452-70302	FP 491.7042	300.5111
BR18	FP KURZSCHLUSSBUCHSE SHORTING PLUG PK 452-70302	FP 491.7042	300.5111
BU2	FP BUCHSE VERTIKAL P.V.1P SOCKET BERG 75377-001	FP 278.5577	300.5111
BIS/TO BU16			
BU72	FJ EINBAUBUCHSE SYST.SMS FIXED SOCKET RADIALL R.299 012	300.6876	
BU73	FJ EINBAUBUCHSE SYST.SMS FIXED SOCKET RADIALL R.299 012	300.6876	
C1	CC 4,7NF+-10%6X9R2000 CAPACITOR VALVO 2222 63051 472	CC 087.7102	300.5111
R C2	CE RICHTIGE SNR. 006.7142 ELECTROLYTIC CAPACITOR ROEDERST ELKO EK47/16	022.7543	300.5111
C3	CC 4,7NF+-10%6X9R2000 CAPACITOR VALVO 2222 63051 472	CC 087.7102	300.5111

Uns alle Rechte vor

Kennzeichen Component No.	Benennung/Beschreibung Designation	Sachnummer Stock No.	enthalten in contained in
C4	CE 100UF-10+50% 25V 13X13 ELECTROLYTIC CAPACITOR ROEDERST ELKOEK100/25	CE 208.4007	300.5111
C5	CC 4,7NF+-10%6X9R2000 CAPACITOR VALVO 2222 63051 472	CC 087.7102	300.5111
C6	CC 4,7NF+-10%6X9R2000 CAPACITOR VALVO 2222 63051 472	CC 087.7102	300.5111
C8	CC 4,7NF+-10%6X9R2000 CAPACITOR VALVO 2222 63051 472	CC 087.7102	300.5111
C9	CC 220PF+-2%6X7N750 CAPACITOR VALVO 2222 678 58221	CC 087.6941	300.5111
C10	CC 680PF+-10%4X5R2000 CAPACITOR VALVO 2222 63051 681	CC 087.7019	300.5111
C11	CC 220PF+-2%6X7N750 CAPACITOR VALVO 2222 678 58221	CC 087.6941	300.5111
C12	CC 10NF-20+50%7X8R6000 CAPACITOR VALVO 2222 63051 64051103	CC 087.7525	300.5111
C13	CC 4,7NF+-10%6X9R2000 CAPACITOR VALVO 2222 63051 472	CC 087.7102	300.5111
C14	CC 4,7NF+-10%6X9R2000 CAPACITOR VALVO 2222 63051 472	CC 087.7102	300.5111
C16	CC 4,7NF+-10%6X9R2000 CAPACITOR VALVO 2222 63051 472	CC 087.7102	300.5111
C17	CC 4,7NF+-10%6X9R2000 CAPACITOR VALVO 2222 63051 472	CC 087.7102	300.5111
C18	CC 4,7NF+-10%6X9R2000 CAPACITOR VALVO 2222 63051 472	CC 087.7102	300.5111
C19	CC 4,7NF+-10%6X9R2000 CAPACITOR VALVO 2222 63051 472	CC 087.7102	300.5111
C20	CC 4,7NF+-10%6X9R2000 CAPACITOR VALVO 2222 63051 472	CC 087.7102	300.5111
C21	CC 4,7NF+-10%6X9R2000 CAPACITOR VALVO 2222 63051 472	CC 087.7102	300.5111
C22	CC 4,7NF+-10%6X9R2000 CAPACITOR VALVO 2222 63051 472	CC 087.7102	300.5111
C23	CC 4,7NF+-10%6X9R2000 CAPACITOR VALVO 2222 63051 472	CC 087.7102	300.5111
C24	CC 4,7NF+-10%6X9R2000 CAPACITOR VALVO 2222 63051 472	CC 087.7102	300.5111

Für diese Unterlage behalten wir uns alle Rechte vor

Kennzeichen Component No.	Benennung/Beschreibung Designation	Sachnummer Stock No.	enthalten in contained in
C25	CC 4,7NF+-10%6X9R2000 CAPACITOR VALVO 2222 63051 472	CC 087.7102	300.5111
C26	CC 4,7NF+-10%6X9R2000 CAPACITOR VALVO 2222 63051 472	CC 087.7102	300.5111
C27	CC 4,7NF+-10%6X9R2000 CAPACITOR VALVO 2222 63051 472	CC 087.7102	300.5111
C28	CC 4,7NF+-10%6X9R2000 CAPACITOR VALVO 2222 63051 472	CC 087.7102	300.5111
C29	CC 4,7NF+-10%6X9R2000 CAPACITOR VALVO 2222 63051 472	CC 087.7102	300.5111
C30	CC 4,7NF+-10%6X9R2000 CAPACITOR VALVO 2222 63051 472	CC 087.7102	300.5111
C31	CC 4,7NF+-10%6X9R2000 CAPACITOR VALVO 2222 63051 472	CC 087.7102	300.5111
C32	CC 4,7NF+-10%6X9R2000 CAPACITOR VALVO 2222 63051 472	CC 087.7102	300.5111
C33	CC 4,7NF+-10%6X9R2000 CAPACITOR VALVO 2222 63051 472	CC 087.7102	300.5111
C34	CC 4,7NF+-10%6X9R2000 CAPACITOR VALVO 2222 63051 472	CC 087.7102	300.5111
C35	CC 4,7NF+-10%6X9R2000 CAPACITOR VALVO 2222 63051 472	CC 087.7102	300.5111
C38	CC 4,7NF+-10%6X9R2000 CAPACITOR VALVO 2222 63051 472	CC 087.7102	300.5111
C39	CC 4,7NF+-10%6X9R2000 CAPACITOR VALVO 2222 63051 472	CC 087.7102	300.5111
C40	CC 4,7NF+-10%6X9R2000 CAPACITOR VALVO 2222 63051 472	CC 087.7102	300.5111
C41	CC 4,7NF+-10%6X9R2000 CAPACITOR VALVO 2222 63051 472	CC 087.7102	300.5111
C42	CC 4,7NF+-10%6X9R2000 CAPACITOR VALVO 2222 63051 472	CC 087.7102	300.5111
C43	CC 180PF+-2%6X7N750 CAPACITOR VALVO 2222 678 58181	CC 087.6935	300.5111
C44	CC 180PF+-2%6X7N750 CAPACITOR VALVO 2222 678 58181	CC 087.6935	300.5111
C46	CC 150PF+-2%6X9N150 CAPACITOR VALVO 2222 678 34151	CC 087.6735	300.5111

Alle Rechte vorbehalten

Kennzeichen Component No.	Benennung/Beschreibung Designation	Sachnummer Stock No.	enthalten in contained in
C47	CC 390PF+- 5%100V NPO VIE CERAMIC CAPACITOR UNIONCARB C052C391J2G1CA	CC 060.0842	300.5111
C48	CK 220PF+-1%125V 5RDX12KS CAPACITOR SIEMENS B31861J1221F000	CK 023.9210	300.5111
C49	CC 390PF+- 5%100V NPO VIE CERAMIC CAPACITOR UNIONCARB C052C391J2G1CA	CC 060.0842	300.5111
C50	CK 220PF+-1%125V 5RDX12KS CAPACITOR SIEMENS B31861J1221F000	CK 023.9210	300.5111
C51	CC 560PF+-5%100V NP05X3X5 CAPACITOR ITW 302E0100RC561J	CC 099.0637	300.5111
C52	CC 12PF+-2%3X4NP0 CAPACITOR VALVO 2222 678 10129	CC 087.6435	300.5111
C53	CC 390PF+- 5%100V NPO VIE CERAMIC CAPACITOR UNIONCARB C052C391J2G1CA	CC 060.0842	300.5111
C54	CC 100NF+-20%100V K6000VI CAPACITOR ERIE 8133-100-Z5U-104-M	060.1326	300.5111
C57	CC 4,7NF+-10%6X9R2000 CAPACITOR VALVO 2222 63051 472	CC 087.7102	300.5111
C58	CC 10NF-20+50%7X8R6000 CAPACITOR VALVO 2222 63051 64051103	CC 087.7525	300.5111
C59	CC 4,7NF+-10%6X9R2000 CAPACITOR VALVO 2222 63051 472	CC 087.7102	300.5111
C60	CC 10NF-20+50%7X8R6000 CAPACITOR VALVO 2222 63051 64051103	CC 087.7525	300.5111
C61	CC 4,7NF+-10%6X9R2000 CAPACITOR VALVO 2222 63051 472	CC 087.7102	300.5111
C62	CC 27PF+-2%4X5NP0 CAPACITOR VALVO 2222 678 10279	CC 087.6470	300.5111
C63	CC 10PF+-0,25PF5X6P100 CAPACITOR VALVO 2222 678 03109	CC 087.6293	300.5111
C64	CC 120PF+-2%6X9NP0 CAPACITOR VALVO 2222 678 10121	CC 087.6558	300.5111
C65	CC 180PF+-2%6X7N750 CAPACITOR VALVO 2222 678 58181	CC 087.6935	300.5111
C66	CC 150PF+-2%5X6N750 CAPACITOR VALVO 2222 678 58151	CC 087.6929	300.5111
C67	CC 22PF+-2%4X5NP0 CAPACITOR VALVO 2222 678 10229	CC 087.6464	300.5111

Für diese Unterlage behalten wir uns alle Rechte vor

Kennzeichen Component No.	Benennung/Beschreibung Designation	Sachnummer Stock No.	enthalten in contained in
C68	CK 371PF+-1%160V6RDX12 KS CAPACITOR SIEMENS B31861-J1371-F1	CK 076.5290	300.5111
C69	CC 56PF+-2%5X6NP0 CAPACITOR VALVO 2222 678 10569	CC 087.6512	300.5111
C70	CC 22PF+-2%4X5NP0 CAPACITOR VALVO 2222 678 10229	CC 087.6464	300.5111
C71	CK 390PF+-1%160V 6RDX12 CAPACITOR SIEMENS B31861-J1391-F	CK 087.4955	300.5111
C72	CK 371PF+-1%160V6RDX12 KS CAPACITOR SIEMENS B31861-J1371-F1	CK 076.5290	300.5111
C73	CC 100PF+-2%6X9NP0 CAPACITOR VALVO 2222 678 10101	CC 087.6541	300.5111
C74	CC 27PF+-2%4X5NP0 CAPACITOR VALVO 2222 678 10279	CC 087.6470	300.5111
C75	CK 390PF+-1%160V 6RDX12 CAPACITOR SIEMENS B31861-J1391-F	CK 087.4955	300.5111
C76	CK 371PF+-1%160V6RDX12 KS CAPACITOR SIEMENS B31861-J1371-F1	CK 076.5290	300.5111
C77	CK 390PF+-1%160V 6RDX12 CAPACITOR SIEMENS B31861-J1391-F	CK 087.4955	300.5111
C78	CC 82PF+-2%6X7N150 CAPACITOR VALVO 2222 678 34829	CC 087.6706	300.5111
C79	CC 8,2PF+-0,25PF3X4N150 CAPACITOR VALVO 2222 678 33828	CC 087.6587	300.5111
C81	CC 27PF+-2%4X5N150 CAPACITOR VALVO 2222 678 34279	CC 087.6641	300.5111
C82	CC 82PF+-2%6X7N150 CAPACITOR VALVO 2222 678 34829	CC 087.6706	300.5111
C83	CC 4,7NF+-10%6X9R2000 CAPACITOR VALVO 2222 63051 472	CC 087.7102	300.5111
C84	CC 4,7NF+-10%6X9R2000 CAPACITOR VALVO 2222 63051 472	CC 087.7102	300.5111
C85	CE 100UF-10+50% 25V 13X13 ELECTROLYTIC CAPACITOR ROEDERST ELKOEK100/25	CE 208.4007	300.5111
C86	CC 180PF+-2%6X7N750 CAPACITOR VALVO 2222 678 58181	CC 087.6935	300.5111
C87	CC 220PF+-2%6X7N750 CAPACITOR VALVO 2222 678 58221	CC 087.6941	300.5111

Alle Rechte vorbehalten

Kennzeichen Component No.	Benennung/Beschreibung Designation	Sachnummer Stock No.	enthalten in contained in
C88	CC 180PF+-2%6X7N750 CAPACITOR VALVO 2222 678 58181	CC 087.6935	300.5111
C89	CC 4,7NF+-10%6X9R2000 CAPACITOR VALVO 2222 63051 472	CC 087.7102	300.5111
C90	CC 4,7NF+-10%6X9R2000 CAPACITOR VALVO 2222 63051 472	CC 087.7102	300.5111
C91	CC 4,7NF+-10%6X9R2000 CAPACITOR VALVO 2222 63051 472	CC 087.7102	300.5111
C92	CC 4,7NF+-10%6X9R2000 CAPACITOR VALVO 2222 63051 472	CC 087.7102	300.5111
C93	CC 27PF+-2%4X5NP0 CAPACITOR VALVO 2222 678 10279	CC 087.6470	300.5111
C95	CC 27PF+-2%4X5NP0 CAPACITOR VALVO 2222 678 10279	CC 087.6470	300.5111
C97	CC 22PF+-2%4X5NP0 CAPACITOR VALVO 2222 678 10229	CC 087.6464	300.5111
C98	CC 4,7NF+-10%6X9R2000 CAPACITOR VALVO 2222 63051 472	CC 087.7102	300.5111
C99	CK 300PF+-1% 125V 5RD KS CAPACITOR SIEMENS B31861J1301F000	CK 023.9333	300.5111
C100	CK 300PF+-1% 125V 5RD KS CAPACITOR SIEMENS B31861J1301F000	CK 023.9333	300.5111
C101	CC 10NF-20+50%7X8R6000 CAPACITOR VALVO 2222 63051 64051103	CC 087.7525	300.5111
C102	CC 4,7NF+-10%6X9R2000 CAPACITOR VALVO 2222 63051 472	CC 087.7102	300.5111
C103	CE 100UF-10+50% 25V 13X13 ELECTROLYTIC CAPACITOR ROEDERST ELKOEK100/25	CE 208.4007	300.5111
C104	CC 4,7NF+-10%6X9R2000 CAPACITOR VALVO 2222 63051 472	CC 087.7102	300.5111
C105	CE 100UF-10+50% 25V 13X13 ELECTROLYTIC CAPACITOR ROEDERST ELKOEK100/25	CE 208.4007	300.5111
C106	CE 100UF-10+50% 25V 13X13 ELECTROLYTIC CAPACITOR ROEDERST ELKOEK100/25	CE 208.4007	300.5111
C107	CC 4,7NF+-10%6X9R2000 CAPACITOR VALVO 2222 63051 472	CC 087.7102	300.5111
C150	CC 15PF+-2%3X4NP0 CAPACITOR VALVO 2222 678 10159	CC 087.6441	300.5111

Für diese Unterlage behalten wir uns alle Rechte vor

Kennzeichen Component No.	Benennung/Beschreibung Designation	Sachnummer Stock No.	enthalten in contained in
C201	CC 10PF+-0,25PF3X4N150 CAPACITOR VALVO 2222 678 33109	CC 087.6593	300.5111
C202	CC 27PF+-2%4X5N150 CAPACITOR VALVO 2222 678 34279	CC 087.6641	300.5111
C203	CC 10NF-20+50%7X8R6000 CAPACITOR VALVO 2222 63051 64051103	CC 087.7525	300.5111
C204	CC 10NF-20+50%7X8R6000 CAPACITOR VALVO 2222 63051 64051103	CC 087.7525	300.5111
C205	CC 100NF+-10% 50V5K1200LR CAPACITOR AEROVOX CKR05BX104KLEVELR	CC 092.0777	300.5111
C206	CC 10NF-20+50%7X8R6000 CAPACITOR VALVO 2222 63051 64051103	CC 087.7525	300.5111
C207	CC 12PF+-2%3X4NPO CAPACITOR VALVO 2222 678 10129	CC 087.6435	300.5111
C208	CK 220NF+-5%63V5RM MKT CAPACITOR WIMA MKS2/63/0,22UF/5%	CK 099.2952	300.5111
C209	CK 220NF+-5%63V5RM MKT CAPACITOR WIMA MKS2/63/0,22UF/5%	CK 099.2952	300.5111
C210	CC 330PF+-2%6X9N750 CERAMIC CAPACITOR VALVO 2222 678 58331	CC 087.6964	300.5111
D2	LD 35DB/200M-10GHZ PI-FIL CHOKE ERIE 1214-038	LD 300.6818	300.5134
D3	LD 35DB/200M-10GHZ PI-FIL CHOKE ERIE 1214-038	LD 300.6818	300.5134
D4	LD 35DB/200M-10GHZ PI-FIL CHOKE ERIE 1214-038	LD 300.6818	300.5134
D5	LD 35DB/200M-10GHZ PI-FIL CHOKE ERIE 1214-038	LD 300.6818	300.5134
D6	LD 35DB/200M-10GHZ PI-FIL CHOKE ERIE 1214-038	LD 300.6818	300.5134
D7	LD 35DB/200M-10GHZ PI-FIL CHOKE ERIE 1214-038	LD 300.6818	300.5134
D8	LD 35DB/200M-10GHZ PI-FIL CHOKE ERIE 1214-038	LD 300.6818	300.5134
D9	LD 35DB/200M-10GHZ PI-FIL CHOKE ERIE 1214-038	LD 300.6818	300.5134

095.0026-0186

Kennzeichen Component No.	Benennung/Beschreibung Designation	Sachnummer Stock No.	enthalten in contained in
D10	LD 35DB/200M-10GHZ PI-FIL CHOKE ERIE 1214-038	LD 300.6818	300.5134
D11	LD 35DB/200M-10GHZ PI-FIL CHOKE ERIE 1214-038	LD 300.6818	300.5134
D12	LD 35DB/200M-10GHZ PI-FIL CHOKE ERIE 1214-038	LD 300.6818	300.5134
D13	LD 35DB/200M-10GHZ PI-FIL CHOKE ERIE 1214-038	LD 300.6818	300.5134
D14	LD 35DB/200M-10GHZ PI-FIL CHOKE ERIE 1214-038	LD 300.6818	300.5134
D15	LD 35DB/200M-10GHZ PI-FIL CHOKE ERIE 1214-038	LD 300.6818	300.5134
D16	LD 35DB/200M-10GHZ PI-FIL CHOKE ERIE 1214-038	LD 300.6818	300.5134
L1	LD 330 UH10%28,00HM0,045A CHOKE DELEVAN DROSSEL1025-80	LD 067.3160	300.5111
L2	LD 330 UH10%28,00HM0,045A CHOKE DELEVAN DROSSEL1025-80	LD 067.3160	300.5111
L3	LD 220 UH10%21,00HM0,052A CHOKE DELEVAN DROSSEL1025-76	LD 067.3147	300.5111
L4	LD 220 UH10%21,00HM0,052A CHOKE DELEVAN DROSSEL1025-76	LD 067.3147	300.5111
L5	LD 680UH 2%600HM0,034A CHOKE DELEVAN 1025-88 +-2%	337.8772	300.5111
L6	LD 680UH 2%600HM0,034A CHOKE DELEVAN 1025-88 +-2%	337.8772	300.5111
L7	LD 680UH 2%600HM0,034A CHOKE DELEVAN 1025-88 +-2%	337.8772	300.5111
L8	LD 1000UH10%72,00HM0,028A CHOKE DELEVAN DROSSEL1025-92	LD 037.8005	300.5111
L9	LD 68,0UH10%6,700HM0,092A CHOKE DELEVAN DROSSEL1025-64	LD 067.3082	300.5111
L10	LD 68,0UH10%6,700HM0,092A CHOKE DELEVAN DROSSEL1025-64	LD 067.3082	300.5111
L11	LD 12UH 2%2,700HM0,16A CHOKE DELEVAN 1025-46 +-2%	337.8789	300.5111

Für diese Unterlage behalten wir uns alle Rechte vor

Kennzeichen Component No.	Benennung/Beschreibung Designation	Sachnummer Stock No.	enthalten in contained in
L12	LD 12UH 2%2,700HMO,16A CHOKE DELEVAN 1025-46 +-2%	337.8789	300.5111
L13	LD 12UH 2%2,700HMO,16A CHOKE DELEVAN 1025-46 +-2%	337.8789	300.5111
L14	LD 12UH 2%2,700HMO,16A CHOKE DELEVAN 1025-46 +-2%	337.8789	300.5111
L15	LD 12UH 2%2,700HMO,16A CHOKE DELEVAN 1025-46 +-2%	337.8789	300.5111
L16	LD 12UH 2%2,700HMO,16A CHOKE DELEVAN 1025-46 +-2%	337.8789	300.5111
L17	LD 12,0UH10%2,700HMO,160A CHOKE DELEVAN DROSSEL1025-46	LD 067.2992	300.5111
L18	LD 39,0UH10%3,600HMO,125A CHOKE DELEVAN DROSSEL1025-58	LD 067.3053	300.5111
L19	LD 56,0UH10%5,700HMO,100A CHOKE DELEVAN DROSSEL1025-62	LD 067.3076	300.5111
L20	LD 47,0UH10%4,500HMO,110A CHOKE DELEVAN DROSSEL1025-60	LD 067.3060	300.5111
L21	LD 47,0UH10%4,500HMO,110A CHOKE DELEVAN DROSSEL1025-60	LD 067.3060	300.5111
L22	LD 5,60UH 2%1,800HMO,195A CHOKE DELEVAN 1025-38 +-2%	337.8808	300.5111
L23	LD 0,56UH 10% 56C MIA CHOKE DELEVAN	LD 092.3124	300.5111
L24	LD 5,60UH 2%1,800HMO,195A CHOKE DELEVAN 1025-38 +-2%	337.8808	300.5111
L25	LD 0,56UH5%0,5 OHM 0,495A CHOKE DELEVAN 1025-14 +-5%	300.9752	300.5111
L26	LD 0,56UH5%0,5 OHM 0,495A CHOKE DELEVAN 1025-14 +-5%	300.9752	300.5111
L37	LD 27,0UH10%3,500HMO,140A CHOKE DELEVAN DROSSEL1025-54	LD 067.3030	300.5111
L101	LD 3,90UH10%1,000HMO,263A CHOKE DELEVAN DROSSEL1025-34	LD 067.2934	300.5111
L102	LD 3,90UH10%1,000HMO,263A CHOKE DELEVAN DROSSEL1025-34	LD 067.2934	300.5111
L104	LD 1000UH10%72,00HMO,028A CHOKE DELEVAN DROSSEL1025-92	LD 037.8005	300.5111

Urheberrecht vorhanden

Kennzeichen Component No.	Benennung/Beschreibung Designation	Sachnummer Stock No.	enthalten in contained in
MP2	VL WIRE-WRAP PIN BERG NR. 75 403-001	VL 088.4507	300.5111
MP3	VL WIRE-WRAP PIN BERG NR. 75 403-001	VL 088.4507	300.5111
MP4	VL WIRE-WRAP PIN BERG NR. 75 403-001	VL 088.4507	300.5111
MP6	FP STIFTLEISTE 36POL. PIN CONNECTOR BERG 118-36	FP 099.3807	300.5111
MP7	FP STIFTLEISTE 36POL. PIN CONNECTOR BERG 118-36	FP 099.3807	300.5111
MP8	FP STIFTLEISTE 36POL. PIN CONNECTOR BERG 118-36	FP 099.3807	300.5111
MP10	FP STIFTLEISTE 36POL. PIN CONNECTOR BERG 118-36	FP 099.3807	300.5111
MP11	FP STIFTLEISTE 36POL. PIN CONNECTOR BERG 118-36	FP 099.3807	300.5111
MP12	FP STIFTLEISTE 36POL. PIN CONNECTOR BERG 118-36	FP 099.3807	300.5111
MP14	FP STIFTLEISTE 36POL. PIN CONNECTOR BERG 118-36	FP 099.3807	300.5111
MP15	FP STIFTLEISTE 36POL. PIN CONNECTOR BERG 118-36	FP 099.3807	300.5111
MP16	FP STIFTLEISTE 36POL. PIN CONNECTOR BERG 118-36	FP 099.3807	300.5111
MP18	FP STIFTLEISTE 36POL. PIN CONNECTOR BERG 118-36	FP 099.3807	300.5111
MP19	FP STIFTLEISTE 36POL. PIN CONNECTOR BERG 118-36	FP 099.3807	300.5111
MP20	FP STIFTLEISTE 36POL. PIN CONNECTOR BERG 118-36	FP 099.3807	300.5111
MP25	VL WIRE-WRAP PIN BERG NR. 75 403-001	VL 088.4507	300.5111
BIS/TO MP31			
R1	RL 0,35W 274 OHM+-1%TK50 RESISTOR DRALORIC SMA0207/2740HM-F-D	RL 083.0178	300.5111
R2	RL 0,35W 681 OHM+-1%TK50 RESISTOR DRALORIC SMA0207/6810HM-F-D	RL 083.0490	300.5111
R3	RL 0,35W 33,2 OHM+-1%TK50 RESISTOR DRALORIC SMA0207/33,20HM-F-D	RL 082.9359	300.5111

Für diese Unterlage behalten wir uns alle Rechte vor

Kennzeichen Component No.	Benennung/Beschreibung Designation	Sachnummer Stock No.	enthalten in contained in
R4	RL 0,35W 100 OHM+-1%TK50 METALFILM-RESISTOR DRALORIC SMA0207/100/HM-F-D	RL 082.6543	300.5111
R5	RL 0,35W 475 OHM+-1%TK50 RESISTOR DRALORIC SMA0207/475OHM-F-D	RL 083.0390	300.5111
R6	RL 0,35W 33,2KOHM+-1%TK50 RESISTOR DRALORIC SMA0207/33,2K-F-C	RL 083.1674	300.5111
R7	RL 0,35W 274 OHM+-1%TK50 RESISTOR DRALORIC SMA0207/274OHM-F-D	RL 083.0178	300.5111
R8	RL 0,35W 825 OHM+-1%TK50 RESISTOR DRALORIC SMA 0207/825OHM-F-C	RL 082.2502	300.5111
R9	RL 0,35W 825 OHM+-1%TK50 RESISTOR DRALORIC SMA 0207/825OHM-F-C	RL 082.2502	300.5111
R10	RL 0,35W 33,2KOHM+-1%TK50 RESISTOR DRALORIC SMA0207/33,2K-F-C	RL 083.1674	300.5111
R11	RL 0,35W 15,0KOHM+-1%TK50 RESISTOR DRALORIC SMA0207/15K-F-D	RL 083.1400	300.5111
R12	RL 0,35W 3,32KOHM+-1%TK50 RESISTOR DRALORIC SMA0207/3,32K-F-D	RL 083.0990	300.5111
R13	RL 0,35W 1,21KOHM+-1%TK50 RESISTOR DRALORIC SMA0207/1,21K-F-D	RL 083.0655	300.5111
R14	RL 0,35W 392 OHM+-1%TK50 RESISTOR DRALORIC SMA0207/392K-F-C	RL 082.2183	300.5111
R15	RL 0,35W 10,0KOHM+-1%TK50 RESISTOR DRALORIC SMA0207/10K-F-D	RL 083.1297	300.5111
R16	RS 0,5W50KOHM+-10%10X10X5 CERMET POTENTIOMETER T BOURNS 3386F-1-503	RS 247.7910	300.5111
R17	RL 0,35W 392 OHM+-1%TK50 RESISTOR DRALORIC SMA0207/392K-F-C	RL 082.2183	300.5111
R18	RL 0,35W 1,82KOHM+-1%TK50 RESISTOR DRALORIC SMA0207/1,82K-F-C	RL 082.2277	300.5111
R19	RL 0,35W 10,0KOHM+-1%TK50 RESISTOR DRALORIC SMA0207/10K-F-D	RL 083.1297	300.5111
R20	RL 0,35W 1,21KOHM+-1%TK50 RESISTOR DRALORIC SMA0207/1,21K-F-D	RL 083.0655	300.5111
R21	RL 0,35W 1,82KOHM+-1%TK50 RESISTOR DRALORIC SMA0207/1,82K-F-C	RL 082.2277	300.5111
R22	RL 0,35W 5,62KOHM+-1%TK50 RESISTOR DRALORIC SMA0207/5,62K-F-C	RL 082.2190	300.5111

Kennzeichen Component No.	Benennung/Beschreibung Designation	Sachnummer Stock No.	enthalten in contained in
R23	RL 0,35W 12,1KOHM+-1%TK50 RESISTOR DRALORIC SMA0207/12,1K-F-D	RL 083.1351	300.5111
R24	RL 0,35W 825 OHM+-1%TK50 RESISTOR DRALORIC SMA 0207/8250HM-F-C	RL 082.2502	300.5111
R25	RL 0,35W 1KOHM+-1%TK50 RESISTOR DRALORIC SMA0207/1K-F-C	RL 082.2160	300.5111
R26	RL 0,35W 221 OHM+-1%TK50 RESISTOR DRALORIC SMA0207/2210HM-F-D	RL 083.0084	300.5111
R27	RL 0,35W 221 OHM+-1%TK50 RESISTOR DRALORIC SMA0207/2210HM-F-D	RL 083.0084	300.5111
R28	RL 0,35W 1KOHM+-1%TK50 RESISTOR DRALORIC SMA0207/1K-F-C	RL 082.2160	300.5111
R29	RL 0,35W 10,0KOHM+-1%TK50 RESISTOR DRALORIC SMA0207/10K-F-D	RL 083.1297	300.5111
R30	RL 0,35W 1KOHM+-1%TK50 RESISTOR DRALORIC SMA0207/1K-F-C	RL 082.2160	300.5111
R31	RL 0,35W 825 OHM+-1%TK50 RESISTOR DRALORIC SMA 0207/8250HM-F-C	RL 082.2502	300.5111
R32	RL 0,35W 1,50KOHM+-1%TK50 RESISTOR DRALORIC SMA0207/1,50K-F-D	RL 083.0732	300.5111
R33	RS 0,5W5KOHM+-10%10X10X5 CERMET POTENTIOMETER T BOURNS 3386F-1-502	RS 247.7890	300.5111
R34	RL 0,35W 825 OHM+-1%TK50 RESISTOR DRALORIC SMA 0207/8250HM-F-C	RL 082.2502	300.5111
R35	RL 0,35W 825 OHM+-1%TK50 RESISTOR DRALORIC SMA 0207/8250HM-F-C	RL 082.2502	300.5111
R36	RL 0,35W 825 OHM+-1%TK50 RESISTOR DRALORIC SMA 0207/8250HM-F-C	RL 082.2502	300.5111
R38	RL 0,35W 12,1KOHM+-1%TK50 RESISTOR DRALORIC SMA0207/12,1K-F-D	RL 083.1351	300.5111
R39	RL 0,35W 221 OHM+-1%TK50 RESISTOR DRALORIC SMA0207/2210HM-F-D	RL 083.0084	300.5111
R40	RL 0,35W 1KOHM+-1%TK50 RESISTOR DRALORIC SMA0207/1K-F-C	RL 082.2160	300.5111
R41	RL 0,35W 562 OHM+-1%TK50 RESISTOR DRALORIC SMA0207/5620HM-F-D	RL 083.0461	300.5111
R42	RL 0,35W 681 OHM+-1%TK50 RESISTOR DRALORIC SMA0207/6810HM-F-D	RL 083.0490	300.5111

Für diese Unterlage behalten wir uns alle Rechte vor

Kennzeichen Component No.	Benennung/Beschreibung Designation	Sachnummer Stock No.	enthalten in contained in
R43	RL 0,35W 47,5 OHM+-1%TK50 RESISTOR DRALORIC SMA0207/47,5OHM-F-D	RL 082.9507	300.5111
R44	RL 0,35W 681 OHM+-1%TK50 RESISTOR DRALORIC SMA0207/681OHM-F-D	RL 083.0490	300.5111
R45	RL 0,35W 182 OHM+-1%TK50 RESISTOR DRALORIC SMA0207/182OHM-F-D	RL 083.0010	300.5111
R46	RL 0,35W 2,21KOHM+-1%TK50 RESISTOR DRALORIC SMA 0207/2,21K-F-C	RL 082.2477	300.5111
R47	RL 0,35W 182 OHM+-1%TK50 RESISTOR DRALORIC SMA0207/182OHM-F-D	RL 083.0010	300.5111
R48	RL 0,35W 392 OHM+-1%TK50 RESISTOR DRALORIC SMA0207/392K-F-C	RL 082.2183	300.5111
R49	RL 0,35W 221 OHM+-1%TK50 RESISTOR DRALORIC SMA0207/221OHM-F-D	RL 083.0084	300.5111
R50	RL 0,35W 392 OHM+-1%TK50 RESISTOR DRALORIC SMA0207/392K-F-C	RL 082.2183	300.5111
R51	RL 0,35W 475 OHM+-1%TK50 RESISTOR DRALORIC SMA0207/475OHM-F-D	RL 083.0390	300.5111
R101	RL 0,35W 1,82KOHM+-1%TK50 RESISTOR DRALORIC SMA0207/1,82K-F-C	RL 082.2277	300.5111
R102	RL 0,35W 392 OHM+-1%TK50 RESISTOR DRALORIC SMA0207/392K-F-C	RL 082.2183	300.5111
R103	RL 0,35W 82,5KOHM+-1%TK50 RESISTOR DRALORIC SMA0207/82,5K-F-C	RL 082.2302	300.5111
R104	RL 0,35W 3,92KOHM+-1%TK50 RESISTOR RESISTA MK2	RL 083.1039	300.5111
R105	RL 0,35W 825 OHM+-1%TK50 RESISTOR DRALORIC SMA 0207/8250HM-F-C	RL 082.2502	300.5111
R106	RL 0,35W 1,50KOHM+-1%TK50 RESISTOR DRALORIC SMA0207/1,50K-F-D	RL 083.0732	300.5111
ST2	FP EINZELKONTAKTSTIFT SINGLE-CONTACT PIN ULMIC R&S.ZCHNG.300.8804	300.8804	300.5134
ST3	FP EINZELKONTAKTSTIFT SINGLE-CONTACT PIN ULMIC R&S.ZCHNG.300.8804	300.8804	300.5134
ST4	FP EINZELKONTAKTSTIFT SINGLE-CONTACT PIN ULMIC R&S.ZCHNG.300.8804	300.8804	300.5134

095.0026-0186

Kennzeichen Component No.	Benennung/Beschreibung Designation	Sachnummer Stock No.	enthalten in contained in
ST5	FP EINZELKONTAKTSTIFT SINGLE-CONTACT PIN ULMIC R&S.ZCHNG.300.8804	300.8804	300.5134
ST6	FP EINZELKONTAKTSTIFT SINGLE-CONTACT PIN ULMIC R&S.ZCHNG.300.8804	300.8804	300.5134
ST7	FP EINZELKONTAKTSTIFT SINGLE-CONTACT PIN ULMIC R&S.ZCHNG.300.8804	300.8804	300.5134
ST8	FP EINZELKONTAKTSTIFT SINGLE-CONTACT PIN ULMIC R&S.ZCHNG.300.8804	300.8804	300.5134
ST9	FP EINZELKONTAKTSTIFT SINGLE-CONTACT PIN ULMIC R&S.ZCHNG.300.8804	300.8804	300.5134
ST10	FP EINZELKONTAKTSTIFT SINGLE-CONTACT PIN ULMIC R&S.ZCHNG.300.8804	300.8804	300.5134
ST11	FP EINZELKONTAKTSTIFT SINGLE-CONTACT PIN ULMIC R&S.ZCHNG.300.8804	300.8804	300.5134
ST12	FP EINZELKONTAKTSTIFT SINGLE-CONTACT PIN ULMIC R&S.ZCHNG.300.8804	300.8804	300.5134
ST13	FP EINZELKONTAKTSTIFT SINGLE-CONTACT PIN ULMIC R&S.ZCHNG.300.8804	300.8804	300.5134
ST14	FP EINZELKONTAKTSTIFT SINGLE-CONTACT PIN ULMIC R&S.ZCHNG.300.8804	300.8804	300.5134
ST15	FP EINZELKONTAKTSTIFT SINGLE-CONTACT PIN ULMIC R&S.ZCHNG.300.8804	300.8804	300.5134
ST16	FP EINZELKONTAKTSTIFT SINGLE-CONTACT PIN ULMIC R&S.ZCHNG.300.8804	300.8804	300.5134
ST70	ENTHALTEN IN 300.4150		300.5134
T1	AK BSX29 PNP 12V 200MA TRANSISTOR SGS BSX29	AK 010.3031	300.5111
T2	AM BF247B NKAN 25V FET FET TEXAS BF247B	AM 010.8879	300.5111
T3	AK 2N2369A NPN 15V 200MA TRANSISTOR VALVO 2N2369A	AK 010.4680	300.5111
T4	AK 2N2369A NPN 15V 200MA TRANSISTOR VALVO 2N2369A	AK 010.4680	300.5111
T5	AK 2N2369A NPN 15V 200MA TRANSISTOR VALVO 2N2369A	AK 010.4680	300.5111
T101	AK 2N2369A NPN 15V 200MA TRANSISTOR VALVO 2N2369A	AK 010.4680	300.5111

Für diese Unterlage behalten wir uns alle Rechte vor

Kennzeichen / Component No.	Benennung/Beschreibung / Designation	Sachnummer / Stock No.	enthalten in / contained in
T102	AM J111A NKAN 35V FET FET SILICONIX J111A	AM 214.7685	300.5111
			- ENDE -

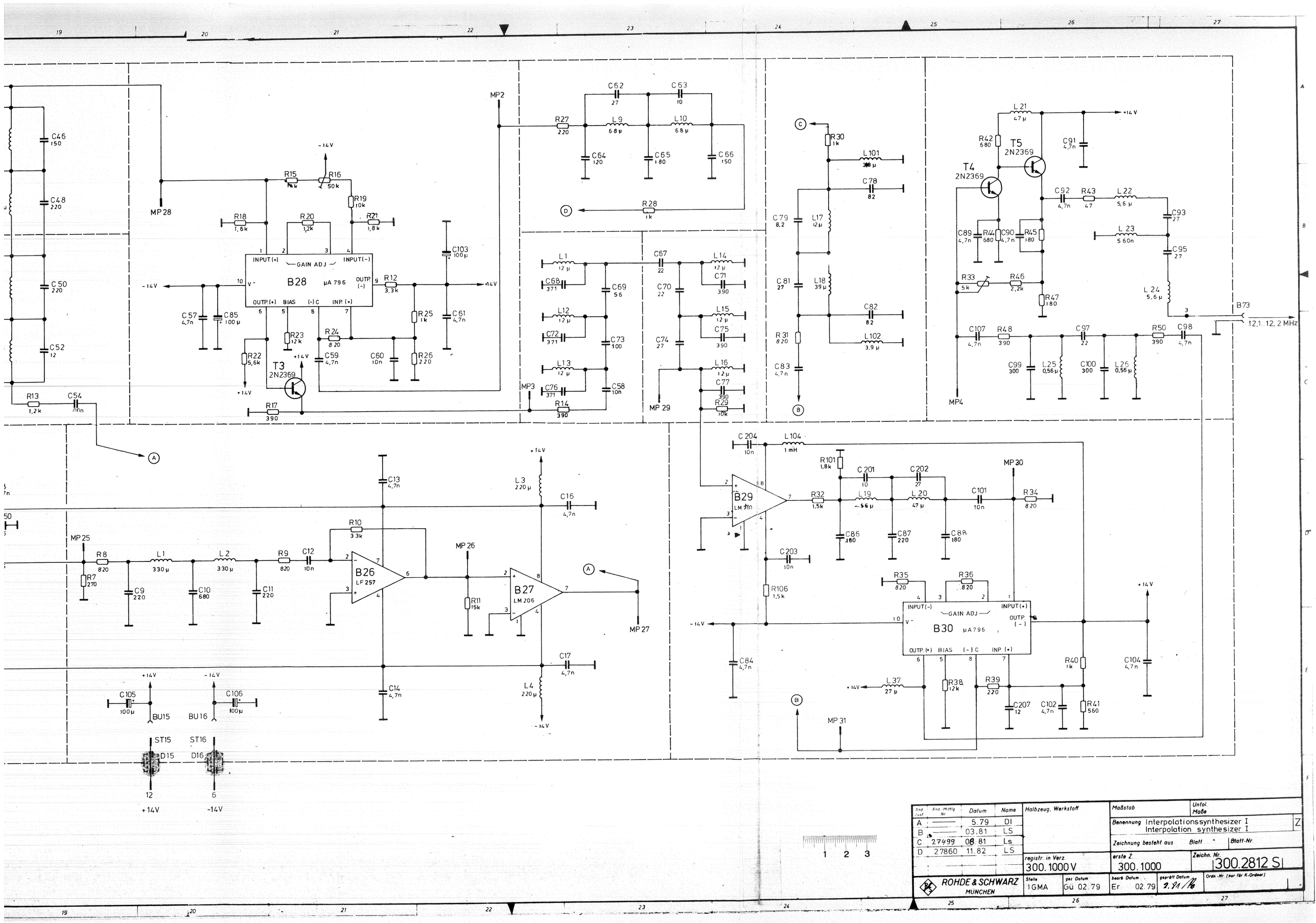

Änd. zust.	Änd.-Mittlg. Nr.	Datum	Name
A	—	5.79	DI
B	—	03.81	LS
C	27499	08.81	Ls
D	27860	11.82	LS

Halbzeug, Werkstoff

Maßstab

Untol. Maße

Benennung Interpolationssynthesizer I
Interpolation synthesizer I

Zeichnung besteht aus Blatt Blatt-Nr.

registr. in Verz. 300.1000 V

erste Z. 300.1000

Zeichn. Nr. 300.2812 S

ROHDE & SCHWARZ MÜNCHEN

Stelle 1GMA

gez. Datum Gü 02.79

bearb. Datum Er 02.79

geprüft Datum 2.81

Ordn.-Nr. (nur für K-Ordner)

B18 74273 N

B19 74LS283

B 20 74LS283

B22 74LS86

B23 74LS86

B24 74LS86

B 21 74LS 273

B25 DAC-80-CBI-1

12 BIT LADDER NETWORK

T102 J 111

T2 BF247

MP18 MP16 MP19 MP20 MP28 MP25

BR18

C32 4,7n

C31 4,7n

C33 4,7n

C35 4,7n

C34 4,7n

C43 180

C44 150

L5 680

C46 150

C47 390

L6 680µ

C48 220

C49 390

L7 680 µ

C50 220

C51 560

L8 1m

C52 12

C53 390

R13 1,2k

C54 100n

C57 4,7n

C8 4,7n

C150 15

C4 100µ

C209 220n

C6 4,7n

C208 220n

C5 4,7n

R5 470

R6 33k

C 210 330

R8 820

L1 330 µ

L2 330 µ

R7 270

C9 220

C10 680

C105 100µ

+5V

-14V

+14V

BU12

BU13

BU15

BU16

ST12

D12

ST13

D13

ST15

D15

ST16

D16

Strobe 2

Strobe 1

B6,B9,B10
B13,B14,B17
B18, B 21

Draufsicht
Top view

B 25

Draufsicht
Top view

B28,B30

T1, T3, T4,T5

T102

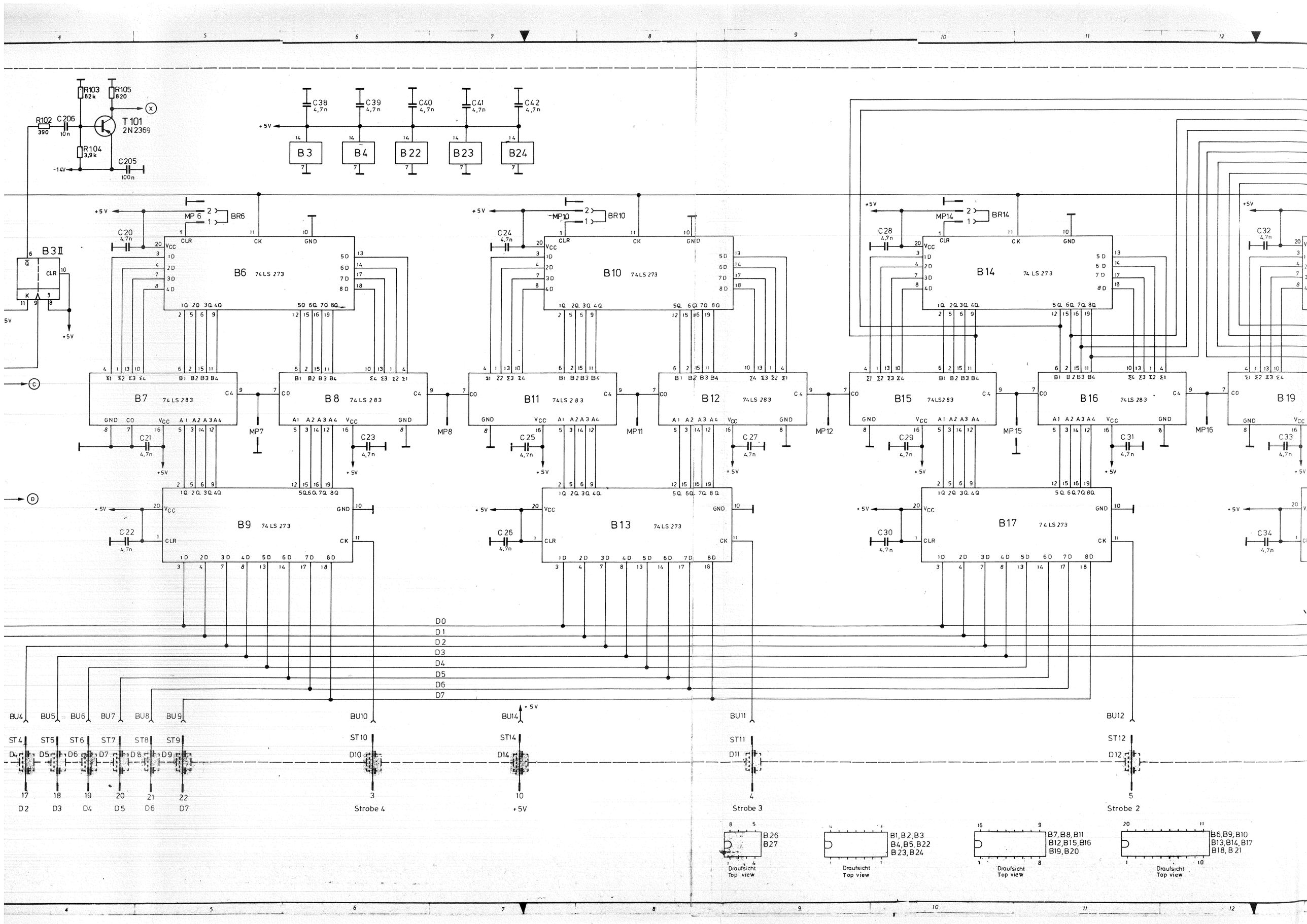

R103 82k
R105 820
R102 390
C206 10n
T101 2N2369
R104 3,9k
C205 100n
-14V
C38 4,7n
C39 4,7n
C40 4,7n
C41 4,7n
C42 4,7n
+5V
B3
B4
B22
B23
B24
B3II
MP 6
BR6
MP10
BR10
MP14
BR14
C20 4,7n
C24 4,7n
C28 4,7n
C32 4,7n
B6 74LS 273
B10 74LS 273
B14 74LS 273
B7 74LS 283
B8 74LS 283
B11 74LS 283
B12 74LS 283
B15 74LS283
B16 74LS 283
B19
MP7
MP8
MP11
MP12
MP15
MP16
C21 4,7n
C23 4,7n
C25 4,7n
C27 4,7n
C29 4,7n
C31 4,7n
C33 4,7n
B9 74LS 273
B13 74LS 273
B17 74LS 273
C22 4,7n
C26 4,7n
C30 4,7n
C34 4,7n
D0
D1
D2
D3
D4
D5
D6
D7
BU4
BU5
BU6
BU7
BU8
BU9
BU10
BU14
BU11
BU12
ST4
ST5
ST6
ST7
ST8
ST9
ST10
ST14
ST11
ST12
D4
D5
D6
D7
D8
D9
D10
D14
D11
D12
17
18
19
20
21
22
3
10
4
5
D2
D3
D4
D5
D6
D7
Strobe 4
+5V
Strobe 3
Strobe 2
B26
B27
Draufsicht
Top view
B1,B2,B3
B4,B5,B22
B23,B24
B7,B8,B11
B12,B15,B16
B19,B20
B6,B9,B10
B13,B14,B17
B18,B21

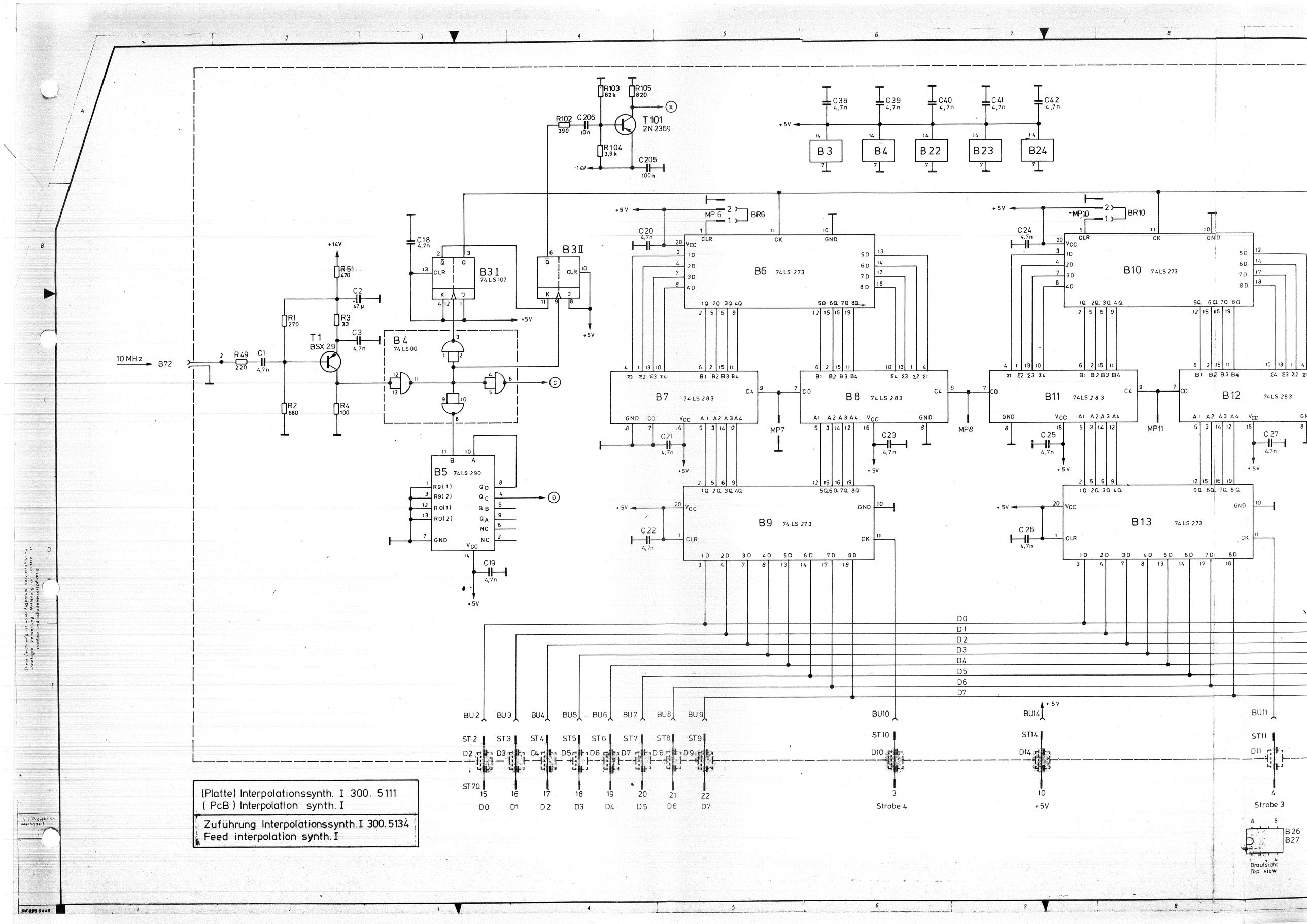

(Platte) Interpolationssynth. I 300. 5111
(PcB) Interpolation synth. I

Zuführung Interpolationssynth. I 300. 5134
Feed interpolation synth. I

Ansicht und Leitungsführung Bauteilseite
View of tracks on component side

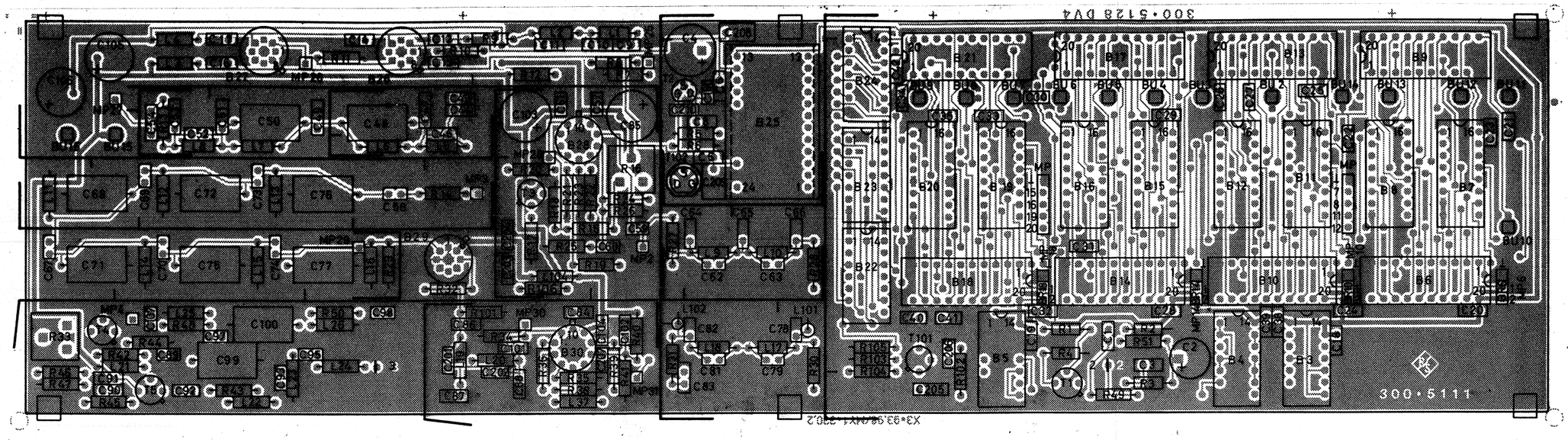

Ansicht und Leitungsführung Lötseite
View of tracks on solder side

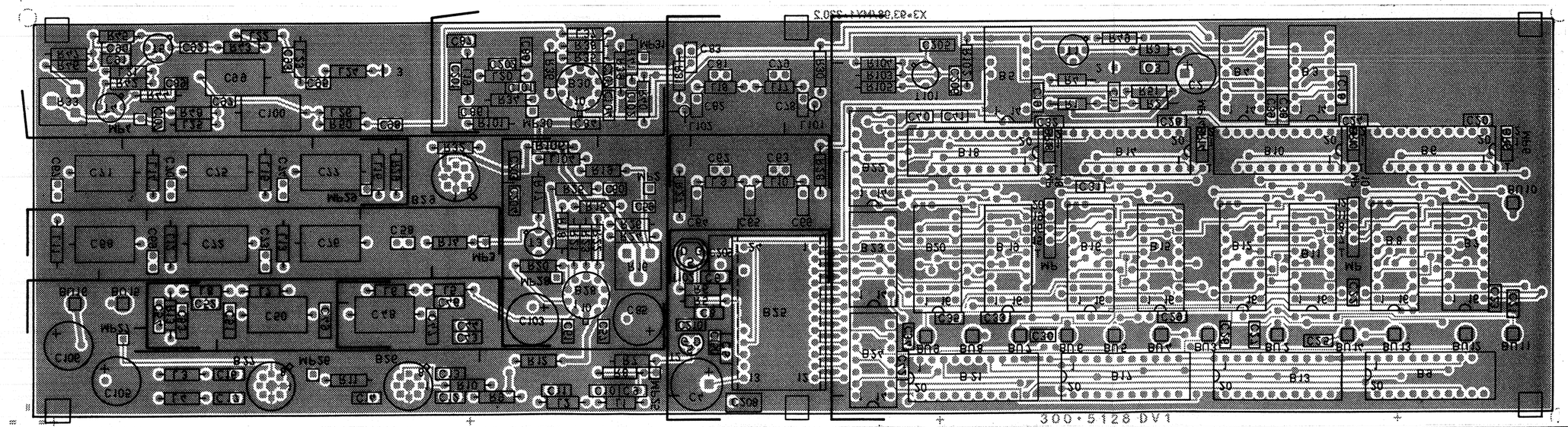

Für diese Zeichnung behalten wir uns alle Rechte vor.

Versorg.-Nr.				VG-Sachnr.		
F	27499	15.7.81	LS	Maße ohne Toleranzangabe		Maßstab 1 : 1
G	27860	4.82	GS			Halbzeug, Werkstoff

	Tag	Name
1GME		
Bearb	15.7.81	LS
Gepr		
Norm		

ROHDE & SCHWARZ MÜNCHEN

zu Gerät SMPC

Benennung: Interpolationssynthesizer I — Z

Zeichn.-Nr. 300.5111 — Blatt-Nr. 2 — v — Bl.

reg. V 300.1000V — erste Z 300.2812

And. Zust.	Änderungs-Mitteilung	Tag	Name

095 2493-2 CDD

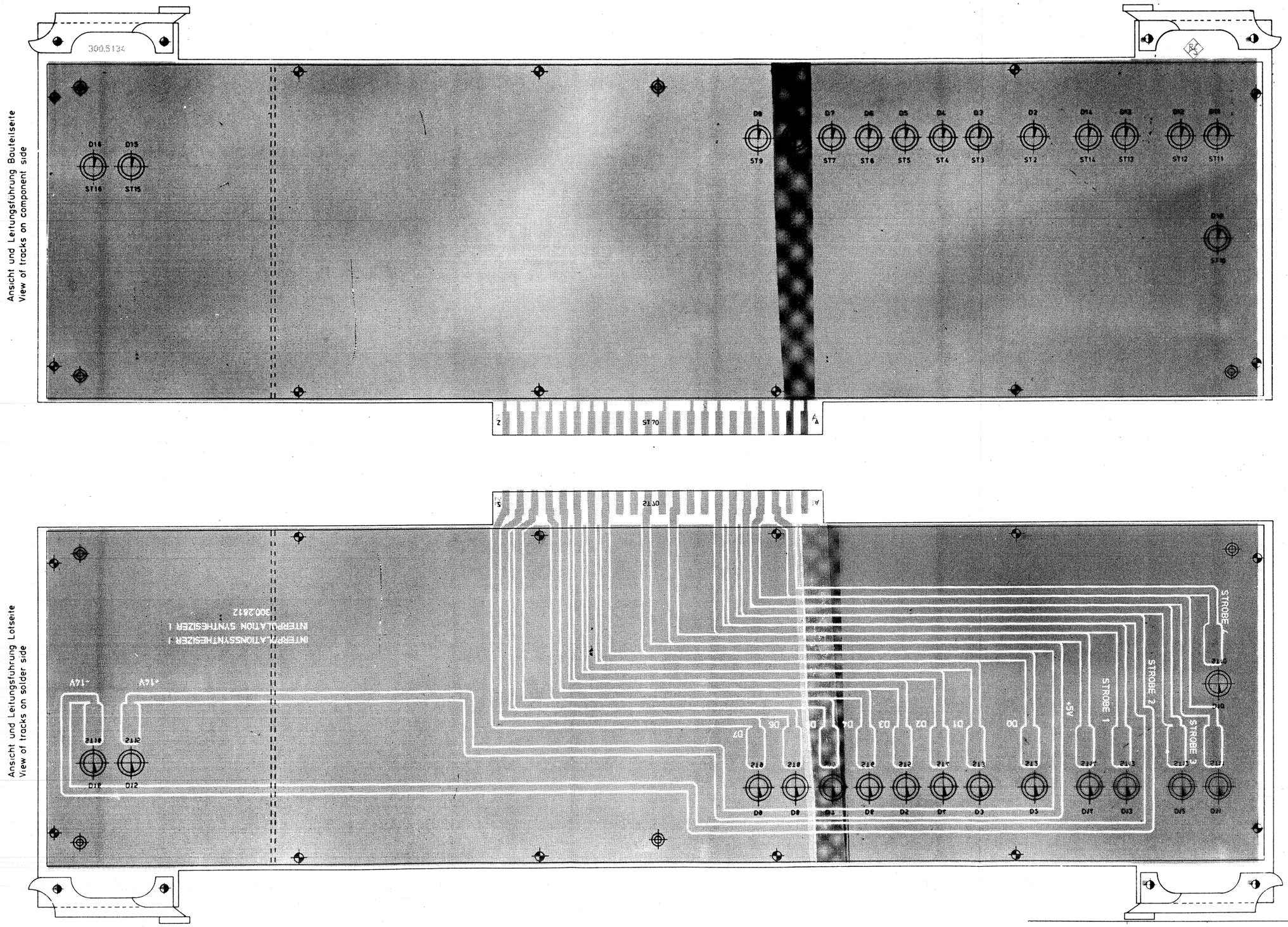

Ansicht und Leitungsführung Bauteilseite
View of tracks on component side

Ansicht und Leitungsführung Lötseite
View of tracks on solder side

0 1 2 3
ZENTIMETER

Maßstab 2 1			
Halbzeug-Werkstoff			
IGME	Tag	Name	Benennung
Bearb.	17.5.79	HE	Zuf. Interpol.-Synth. I Z
Gepr.	5.79		Feed interpol.-synth. I
Norm			
ROHDE & SCHWARZ			Zeichn. Nr. 300.5134
Zu Gerät SMPC			Reg. 300 1000V Letzte Z 300.2812
Anderungs Mitteilung	Tag	Name	Blatt Nr. 2

ROHDE&SCHWARZ

SERVICE INSTRUCTIONS FOR

Interpolation Synthesizer II

300.7714 (Y5)

Table of Contents

		Page
5	Service Instructions for Interpolation Synthesizer II 300.7714 (Y5)	5.1
5.1	Circuit Description	5.1
5.1.1	135-MHz Oscillator 300.5234	5.1
5.1.2	Buffer Divider 300.6030	5.1
5.2	Checking and Adjustment Procedures	5.2
5.2.1	Checking the 135-MHz Oscillator 300.5234	5.2
5.2.1.1	Checking the Synchronization	5.2
5.2.1.2	Checking the Spectrum	5.2
5.2.2	Adjustment of 135-MHz Oscillator	5.2
5.2.3	Checking the Buffer Divider 300.6030	5.3
5.2.4	Adjustment of Buffer Divider	5.3
5.3	Troubleshooting	5.4
5.3.1	135-MHz Oscillator 300.5234	5.4
5.3.1.1	Nominal DC voltages	5.4
5.3.1.2	Synchronization	5.4
5.3.2	Buffer Divider 300.6030	5.4
5.3.3	Interfaces	5.5

Parts list
Circuit diagram
Components location plans

5.1 Circuit Description

(See circuit diagram 300.7714 S and Fig. 5-1)

5.1.1 135-MHz Oscillator 300.5234

Y5 contains a PLL crystal oscillator which acts as local oscillator for the conversion range and supplies the conversion frequency 135 MHz for Y6. It is synchronized with the 10-MHz reference frequency.

The 135-MHz signal from the oscillator (comprising Q100) is applied via buffer amplifiers to ST84 (to Y15), ST85 (to Y6) and to a 3:1 divider (B250) which drives the 5:1 divider (B400). With the aid of a phase comparator and the control amplifier B401 the oscillator is synchronized with the 9th harmonic of the 1-MHz signal which is produced in B50 by dividing the reference frequency arriving from ST86.

Phase comparators T401, T402. For the harmonic phase comparison the T401 supplies a sinusoidal 9-MHz signal (C402, L401). T402 adds to them narrow 1-MHz pulses which are obtained by differentiating the slope of the divider output signal (C404). The peak-value rectifier GL400 supplies a high voltage if the pulse is added to the positive peak of the 9-MHz sinusoidal voltage and a low voltage if the pulse is added to the negative peak of the 9-MHz sinusoidal signal, i.e. it is phase-sensitive.

5.1.2 Buffer Divider 300.6030

This divider must have very low inherent noise as it is to transfer the noise distribution curve of the buffer oscillator as purely as possible to the PLL. The 240-MHz signal is applied to conventional ECL (B201) and TTL (B202) dividers. A gating switch (T208) activated by a pulse shaper connects one edge of the 240-MHz signal through to the output (ST89). The 40-MHz signal from the first divider is brought out at ST88 for buffer control (Y7).

5.2 Checking and Adjustment Procedures

5.2.1 Checking the 135-MHz Oscillator 300.5234

Prior to carrying out any measurements allow the XPC/SMPC to warm up for at least 20 min.

5.2.1.1 Checking the Synchronization

Connect frequency counter to ST84.

Apply calibrated 10-MHz signal (error < 5 x 10^{-7}) with a level > 0.5 V_{rms} to ST86. Operate frequency counter with the same reference as the signal generator at ST86.
A frequency of 134.99865 MHz should be measured at 9.999900 MHz, of 135.00000 MHz at 10 MHz and of 135.00135 at 10.0000100 MHz.
ST80.2 (ALARM, low = active) must always be high (> 3.5 V).

5.2.1.2 Checking the Spectrum

Connect RF analyzer with high resolution in vicinity of carrier to ST84. Connect internal crystal oscillator of XPC/SMPC to ST86. Measure spectrum with 1 kHz span and resolution of 10 Hz. Hum sidebands and non-harmonic spurious signals must be < -70 dB.

5.2.2 Adjustment of 135-MHz Oscillator

Remove BR1 and apply a DC voltage of 19 V to MP1. Connect frequency counter (error <5 x 10^{-7}) to ST84. Insert BR6 across contacts 1-2.

Start oscillator by turning C103. Stop oscillations by turning C103 counterclockwise, then adjust in the opposite direction until oscillations start again. Test for correct start of oscillator by repeated switch-on and off. The oscillator frequency should be >135.0025 MHz and <134.9975 MHz with MP1 at 15.6 V and 1.7 V, respectively.

Tuning range may be shifted max. 1 kHz downwards by screwing in C103 clockwise.

In case of replacing crystal Q100, choose L101 corresponding to the statical capacity C_0 in accordance with the following table:

C_0 of crystal in pF	4	5	6	7	8
L101 in µH	0.33	0.27	0.22	0.18	0.15

If tuning range is too narrow, use next smaller value of E-12-series for L101. Shortening connecting wires to the crystal shifts tuning range upwards.

5.2.3 Checking the Buffer Divider 300.6030

Feed 240-to-247-MHz signal with a level of 10 dBm to ST87. Connect oscilloscope with 50-Ω input and > 350 MHz bandwidth to ST89. The following oscillogram should be obtained:

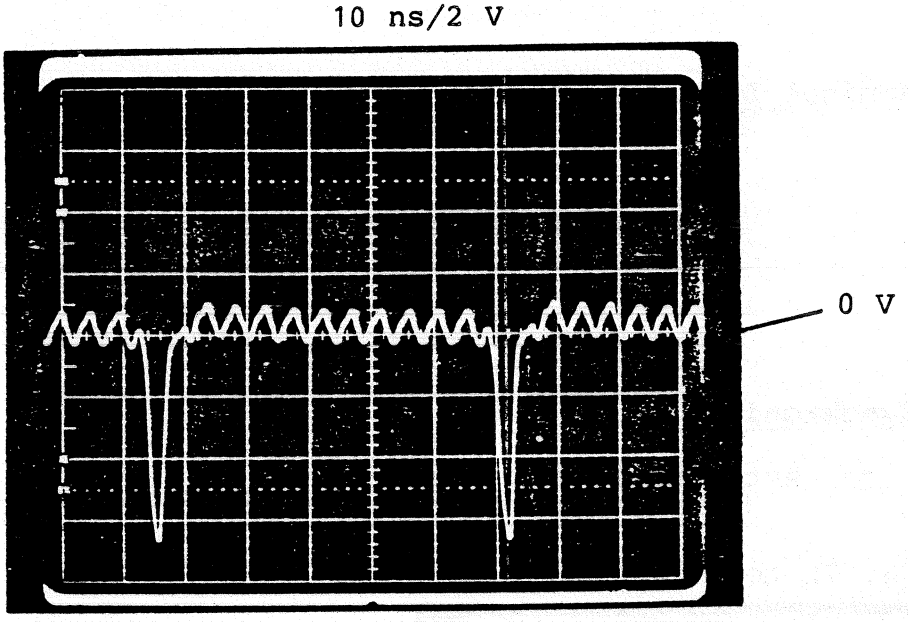

5.2.4 Adjustment of Buffer Divider

Same test setup as under 5.2.3. First adjust L202 for maximum residual RF at 243.5 MHz. Then adjust oscillogram according to section 5.2.3 by means of L206, R223 and R231. L206 determines the phase of the gated pulse, R223 its width and R231 its height.
The pattern of the oscillogram must remain unchanged from 240 to 247 MHz. R223 must not reduce the amplitude of the pulse. Subsequently, the complete Synthesizer Generator must be adjusted according to section 4.3.

5.3 Troubleshooting

5.3.1 135-MHz Oscillator 300.5234

5.3.1.1 Nominal DC Voltages

MP1	1.7 to 15.4 V
MP2	2.7 ±0.2 V
MP3	0.7 ±0.1 V
MP4	4.8 ±0.3 V
MP5	3.3 ±0.2 V

5.3.1.2 Synchronization

Oscillogram at collector of T402

Interpol. synth. II coll. T402

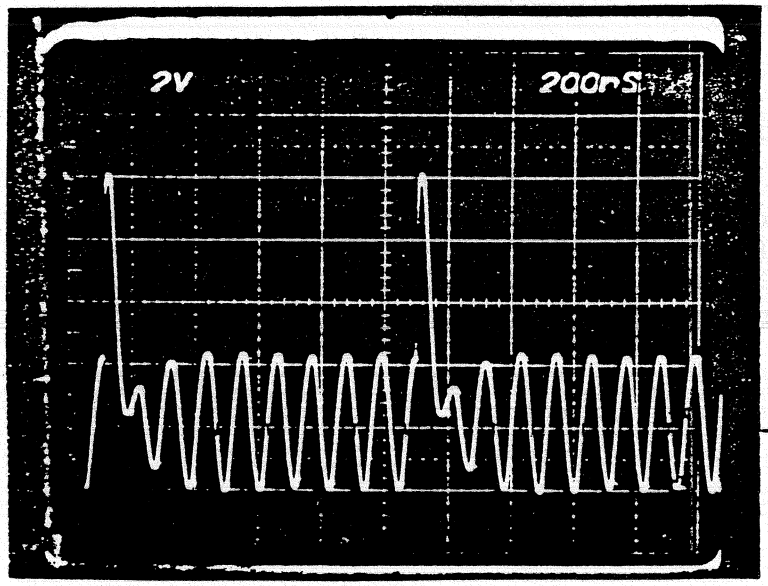

5.3.2 Buffer Divider 300.6030

Collector T202: 240 to 247 MHz, > 5 V_{pp}

Drain T207: pulse > 10 V,
width approximately 4 ns,
period approximately 50 ns.

5.3.3 Interfaces

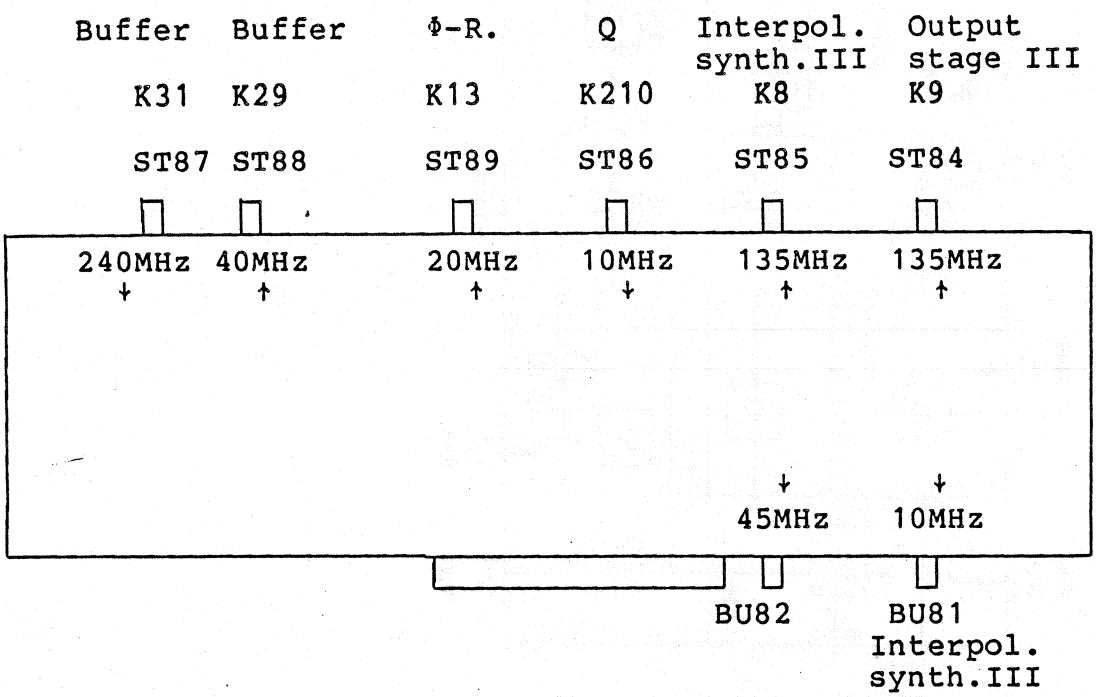

ST/BU	81	82	84	85
f	10 MHz	45 MHz	135 MHz	135 MHz
Level	TTL	0 dBm	0 ±1 dBm	0 ±1 dBm
Z		56 Ω	50 Ω	50 Ω
AC-DC	DC	AC	AC	AC
Shape of curve		rectangular	sinusoidal	sinusoidal, harmonics

ST/BU	86	87	88	89
f	10 MHz	240 to 247 MHz	40 MHz	20 MHz
Level	1.4 ±0.2V_{pp}	8 ±2 dBm	TTL	≈5 V_{pp}
Z	50 Ω	50 Ω	56 Ω	50 Ω
AC-DC	AC	AC	DC	AC
Shape of curve	rectangular	sinusoidal, harmonics	rect-angular	narrow pulse negative

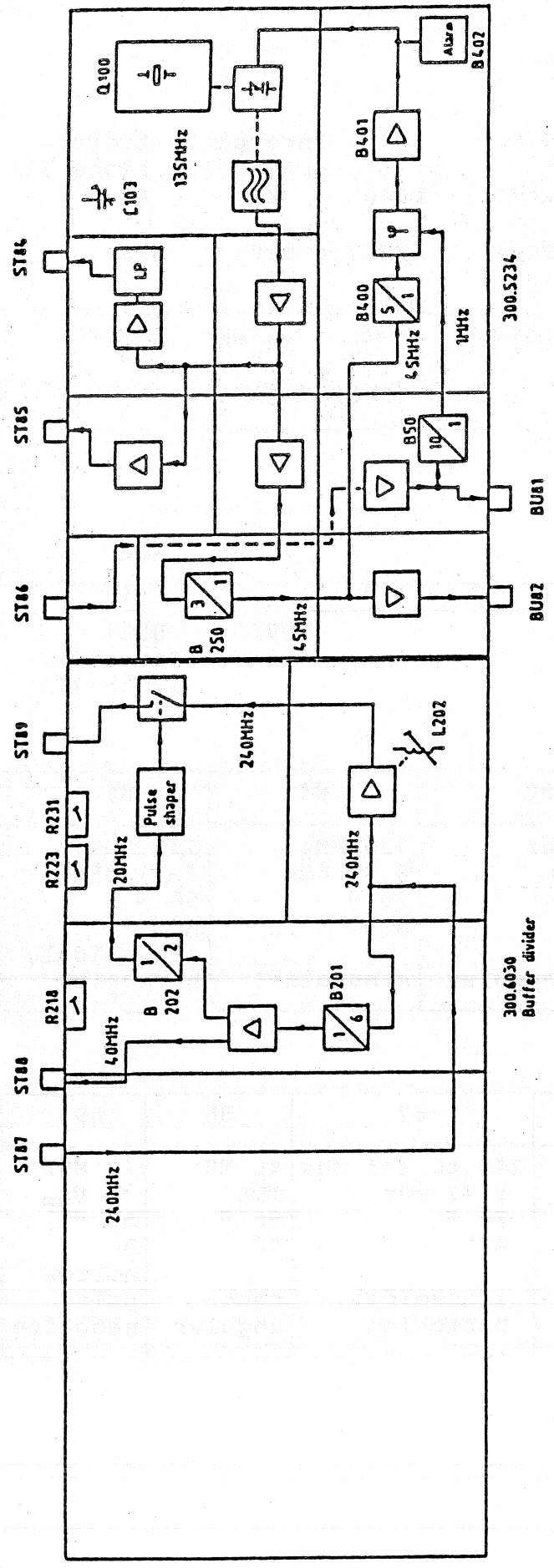

Fig. 5-1 Block diagram of interpolation synthesizer II

ROHDE & SCHWARZ
MÜNCHEN

Schaltteillisten
Stromläufe
Bestückungspläne

Parts lists
Circuit diagrams
Components plans

R 29500 Bl. 2

ROHDE&SCHWARZ	ÄZ / Datum / Date	Schaltteilliste für / Parts list for	Sachnummer / Stock No.	Blatt / Page
	39 / 0686	ZE INTERPOL.-SYNTHESIZER INTERPO.-SYNTHESIZER II	300.7714.00 SA	1

Kennzeichen / Component No.	Benennung/Beschreibung / Designation	Sachnummer / Stock No.	enthalten in / contained in
B50	BL SN74LS290N DEC.COUNTER IC DECADE COUNTER SN74LS2 TEXAS SN74LS290N	300.6447	300.5234
B201	BL SP8741BDG 7:1DIVID UHF DIVIDER PLESSEY SP8741BDG	BL 300.6899	300.6030
B202	BL SN74S112N DUALFLIPFLOP IC FLIP FLOP SN74S112N TEXAS SN74S112N	210.6026	300.6030
B250	BL MC10231L 2XD FLIPFL FLIP FLOP MOTOROLA MC10231L	BL 300.6201	300.5234
B400	BL SN74S196N DEC.COUNTER IC DECADE COUNTER SN74S19 TEXAS SN74S196N	300.6776	300.5234
B401	BO LF156H BIFET OPAMP OPERATIONAL AMPLIFIER MOTOROLA LF156H	BO 333.5862	300.5234
B402	BO TCA965 FENSTER-DISKRIM DISCRIMINATOR SIEMENS TCA965	BO 279.2213	300.5234
BR1	FP KURZSCHL.BUCHSE OFFEN SHORTING PLUG BERG 76264-101	FP 342.1895	300.5234
BR6	FP KURZSCHL.BUCHSE OFFEN SHORTING PLUG BERG 76264-101	FP 342.1895	300.5234
BU1	FP BUCHSE VERTIKAL P.V.1P SOCKET BERG 75377-001	FP 278.5577	300.5234
BIS/TO BU4			
BU5	FP BUCHSE VERTIKAL P.V.1P SOCKET BERG 75377-001	FP 278.5577	300.6030
BU81	FJ EINBAUBUCHSE SYST.SMS FIXED SOCKET RADIALL R.299 012	300.6876	
C1	CB 2,2NF-20+50% HDK4000DF FEED-THROUGH CAPACITOR DRALORIC 2200PFR4000N.ZEICHN.	CB 023.0159	
C50	CE 47UF-10+50% 40V 9X13 ELECTROLYTIC CAPACITOR ROEDERST EK 00 CB 247 G	CE 006.7142	300.5234
C51	CC 100NF+-10%50V5K1200VIE CAPACITOR UNION CARB CK05BX104K	CC 084.5350	300.5234
C52	CC 1,8NF+-10%4X5R2000 CAPACITOR VALVO 2222 63051 182	CC 087.7054	300.5234
C100	CC 1NF+-10%100V2K1200CHIP CAPACITOR VITRAMON VJ0805Y102KFA	CC 082.7385	300.5234

Für diese Unterlage behalten wir uns alle Rechte vor

Kennzeichen Component No.	Benennung/Beschreibung Designation	Sachnummer Stock No.	enthalten in contained in
C101	CE 2,2UF+-20%20V 5X 4X 7 ELECTROLYTIC CAPACITOR ERO-TANTAL TA-ELKOETR-2,2/20	CE 022.8104	300.5234
C102	CC 270PF+-2%6X9N750 CAPACITOR DRALORIC EDPU6X9/270/2%N750	CC 087.6958	300.5234
C103	CT 9,2PF TAUCHTR.RD 7X12 AIR-TYPE TRIMMER TEKELEC LUFTTRAT5201MMUTTER	CT 025.7373	300.5234
C104	CC 1NF+-10%63V K2000 CERAMIC CAPACITOR VALVO 2222 63051 102	CC 022.0784	300.5234
C105	CC 120PF+- 5%100V NP0 VIE CERAMIC CAPACITOR UNIONCARB C052C121J2G1CA	CC 060.0788	300.5234
C106	CC 270PF+- 5%100V NP0 VIE CERAMIC CAPACITOR UNIONCARB C052C271J2G1CA	CC 060.0820	300.5234
C107	CC 8,2PF+-0,25PF3X4NP0 CAPACITOR VALVO 2222 678 09828	CC 087.6412	300.5234
C109	CE 2,2UF+-20%20V 5X 4X 7 ELECTROLYTIC CAPACITOR ERO-TANTAL TA-ELKOETR-2,2/20	CE 022.8104	300.5234
C110	CC 100PF+-2%4X5N750 CAPACITOR VALVO 2222 678 58101	CC 087.6906	300.5234
C111	CC 270PF+-5%50V NP0 1206 CERAMIC CHIP CAPACITOR VITRAMON VJ1206A271JFA	CC 099.8867	300.5234
C201	CC 5,6PF+-0,25PF4X5P100 CAPACITOR VALVO 2222 678 03568	CC 087.6264	300.6030
C202	CC 680PF+-10%4X5R2000 CAPACITOR VALVO 2222 63051 681	CC 087.7019	300.6030
C203	CC 680PF+-10%4X5R2000 CAPACITOR VALVO 2222 63051 681	CC 087.7019	300.6030
C204	CC 1NF+-10%63V K2000 CERAMIC CAPACITOR VALVO 2222 63051 102	CC 022.0784	300.6030
C205	CC 2,2PF+-0,25PF3N750PERL CAPACITOR STETTNER PDAL3 2,2/0,25/N750	249.4924	300.6030
C206	CC 10NF+-10% 50V3K1200 CH CAPACITOR VITRAMON VJ1005Y103KFB	CC 082.3344	300.6030
C207	CC 1NF+-10%63V K2000 CERAMIC CAPACITOR VALVO 2222 63051 102	CC 022.0784	300.6030
C208	CC 3,3NF+-10%100V3K1200 C CAPACITOR VITRAMON VJ1005Y332KFB	CC 082.3280	300.6030
R C209	CE RICHTIGE SNR. 006.7142 ELECTROLYTIC CAPACITOR SIEMENS B41316-B7476-Z	022.7589	300.6030

Jede Haftung entfällt

Kennzeichen Component No.	Benennung/Beschreibung Designation	Sachnummer Stock No.	enthalten in contained in
C210	CC 10NF-20+50%7X8R6000 CAPACITOR VALVO 2222 63051 64051103	CC 087.7525	300.6030
C211	CC 1NF+-10%63V K2000 CERAMIC CAPACITOR VALVO 2222 63051 102	CC 022.0784	300.6030
C212	CC 1NF+-10%63V K2000 CERAMIC CAPACITOR VALVO 2222 63051 102	CC 022.0784	300.6030
C213	CC 10NF-20+50%7X8R6000 CAPACITOR VALVO 2222 63051 64051103	CC 087.7525	300.6030
C214	CC 1NF+-10%63V K2000 CERAMIC CAPACITOR VALVO 2222 63051 102	CC 022.0784	300.6030
C218	CE 47 UF+-20% 6V 7X 5X11 ELECTROLYTIC CAPACITOR ERO-TANTAL TA/ELKOETR247/6	CE 022.8040	300.6030
C219	CC 1NF+-10%63V K2000 CERAMIC CAPACITOR VALVO 2222 63051 102	CC 022.0784	300.6030
C220	CC 1NF+-10%63V K2000 CERAMIC CAPACITOR VALVO 2222 63051 102	CC 022.0784	300.6030
C221	CE 4,7UF+-20%20V 7X 4X 8 ELECTROLYTIC CAPACITOR ERO-TANTAL TA-ELKOETR2-4,7/20	CE 022.8110	300.6030
C222	CC 680PF+-10%4X5R2000 CAPACITOR VALVO 2222 63051 681	CC 087.7019	300.6030
C223	CC 4,7NF+-10%6X9R2000 CAPACITOR VALVO 2222 63051 472	CC 087.7102	300.6030
C224	CC 100PF+-2%6X9NP0 CAPACITOR VALVO 2222 678 10101	CC 087.6541	300.6030
C225	CC 100PF+-2%6X9NP0 CAPACITOR VALVO 2222 678 10101	CC 087.6541	300.6030
C226	CC 4,7NF+-10%6X9R2000 CAPACITOR VALVO 2222 63051 472	CC 087.7102	300.6030
C227	CC 4,7NF+-10%6X9R2000 CAPACITOR VALVO 2222 63051 472	CC 087.7102	300.6030
C228	CC 4,7NF+-10%100V3K1200 C CAPACITOR VITRAMON VJ1005Y472KFB	CC 082.3309	300.6030
C229	CC 4,7NF+-10%100V3K1200 C CAPACITOR VITRAMON VJ1005Y472KFB	CC 082.3309	300.6030
C230	CC 4,7NF+-10%100V3K1200 C CAPACITOR VITRAMON VJ1005Y472KFB	CC 082.3309	300.6030
C231	CC 1NF+-10%63V K2000 CERAMIC CAPACITOR VALVO 2222 63051 102	CC 022.0784	300.6030

Für diese Unterlage behalten wir uns alle Rechte vor

Kennzeichen Component No.	Benennung/Beschreibung Designation	Sachnummer Stock No.	enthalten in contained in
C232	CC 1NF+-10%63V K2000 CERAMIC CAPACITOR VALVO 2222 63051 102	CC 022.0784	300.6030
C250	CC 1NF+-10%63V K2000 CERAMIC CAPACITOR VALVO 2222 63051 102	CC 022.0784	300.5234
C251	CC 1NF+-10%63V K2000 CERAMIC CAPACITOR VALVO 2222 63051 102	CC 022.0784	300.5234
C252	CC 1NF+-10%63V K2000 CERAMIC CAPACITOR VALVO 2222 63051 102	CC 022.0784	300.5234
C253	CE 2,2UF+-20%20V 5X 4X 7 ELECTROLYTIC CAPACITOR ERO-TANTAL TA-ELKOETR-2,2/20	CE 022.8104	300.5234
C254	CC 10NF-20+50%7X8R6000 CAPACITOR VALVO 2222 63051 64051103	CC 087.7525	300.5234
C400	CC 100NF+-10%50V5K1200VIE CAPACITOR UNION CARB CK05BX104K	CC 084.5350	300.5234
C401	CC 100NF+-10%50V5K1200VIE CAPACITOR UNION CARB CK05BX104K	CC 084.5350	300.5234
C402	CC 100PF+-2%6X9NP0 CAPACITOR VALVO 2222 678 10101	CC 087.6541	300.5234
C403	CE 2,2UF+-20%20V 5X 4X 7 ELECTROLYTIC CAPACITOR ERO-TANTAL TA-ELKOETR-2,2/20	CE 022.8104	300.5234
C404	CC 68PF+-2%6X7NP0 CAPACITOR VALVO 2222 678 10689	CC 087.6529	300.5234
C405	CC 47PF+-2%5X6NP0 CAPACITOR VALVO 2222 678 10479	CC 087.6506	300.5234
C406	CE 1,0UF+-20%35V 5X 4X 7 ELECTROLYTIC CAPACITOR ERO-TANTAL TA-ELKOETR1-1/35	CE 022.8185	300.5234
C407	CC 47PF+-2%5X6NP0 CAPACITOR VALVO 2222 678 10479	CC 087.6506	300.5234
C408	CC 1UF+-10%50V7K1200VIEL CAPACITOR UNION CARB CK06BX105K	CC 084.5538	300.5234
C409	CE 100UF-10+50% 16V 9X13 ELECTROLYTIC CAPACITOR ROEDERST EK 00CB 310 D	CE 006.7165	300.5234
C410	CC 10NF-20+50%7X8R6000 CAPACITOR VALVO 2222 63051 64051103	CC 087.7525	300.5234
C411	CK 220NF+-5%63V5RM MKT CAPACITOR WIMA MKS2/63/0,22UF/5%	CK 099.2952	300.5234
C412	CE 22UF-10+50% 63V 9X13 ELECTROLYTIC CAPACITOR ROEDERST EK 00 CB 222 J	CE 006.7120	300.5234

Kennzeichen Component No.	Benennung/Beschreibung Designation	Sachnummer Stock No.	enthalten in contained in
C413	CC 1NF+-10%63V K2000 CERAMIC CAPACITOR VALVO 2222 63051 102	CC 022.0784	300.5234
C600	CC 1NF+-10%63V K2000 CERAMIC CAPACITOR VALVO 2222 63051 102	CC 022.0784	300.5234
C601	CE 2,2UF+-20%20V 5X 4X 7 ELECTROLYTIC CAPACITOR ERO-TANTAL TA-ELKOETR-2,2/20	CE 022.8104	300.5234
C602	CC 47PF+-2%4X5N150 CAPACITOR VALVO 2222 678 34479	CC 087.6670	300.5234
C603	CC 1NF+-10%63V K2000 CERAMIC CAPACITOR VALVO 2222 63051 102	CC 022.0784	300.5234
C604	CC 12PF+-2%3X4NP0 CAPACITOR VALVO 2222 678 10129	CC 087.6435	300.5234
C605	CC 12PF+-2%3X4NP0 CAPACITOR VALVO 2222 678 10129	CC 087.6435	300.5234
C700	CC 1NF+-10%63V K2000 CERAMIC CAPACITOR VALVO 2222 63051 102	CC 022.0784	300.5234
C701	CE 2,2UF+-20%20V 5X 4X 7 ELECTROLYTIC CAPACITOR ERO-TANTAL TA-ELKOETR-2,2/20	CE 022.8104	300.5234
C702	CC 1NF+-10%63V K2000 CERAMIC CAPACITOR VALVO 2222 63051 102	CC 022.0784	300.5234
C703	CC 1NF+-10%63V K2000 CERAMIC CAPACITOR VALVO 2222 63051 102	CC 022.0784	300.5234
D1	LD 35DB/200M-10GHZ PI-FIL CHOKE ERIE 1214-038	LD 300.6818	300.5257
BIS/TO D4			
GL99	AE 5082-2800 SCHOTTKYDI DIODE HEWLETT-P. 5082-2800	AE 012.9066	300.5234
GL100	AE BB909B 25/ 3PF CDI TUNING DIODE VALVO BB909B	AE 092.9600	300.5234
BIS/TO GL102			
GL250	AD 1N4448 75V 0,15A UDI DIODE VALVO 1N4448	AD 012.0700	300.5234
GL251	AD 1N4448 75V 0,15A UDI DIODE VALVO 1N4448	AD 012.0700	300.5234
GL400	AD 1N4448 75V 0,15A UDI DIODE VALVO 1N4448	AD 012.0700	300.5234

Für diese Unterlage behalten wir uns alle Rechte vor

Kennzeichen Component No.	Benennung/Beschreibung Designation	Sachnummer Stock No.	enthalten in contained in
GL401	AE BAV45 35V PICOAMP.DI LOW LEAKAGE DIODE VALVO BAV45	AD 252.5386	300.5234
GL402	AE BAV45 35V PICOAMP.DI LOW LEAKAGE DIODE VALVO BAV45	AD 252.5386	300.5234
K1	DX LEITUNG CABLE	300.9281	300.5234
K2	DX LEITUNG CABLE	300.9275	300.5234
K3	DX HF-KABEL RF CABLE	300.8040	
L100	LF ROHRK.RD3,5X1,2X3 GETR TUBLAR CORE VALVO 4312 020 31051	LF 026.9257	300.5234
L101	LD 0,22UH10%0,140HM1,045A CHOKE DELEVAN DROSSEL1025-04 TRIMMWERT	LD 067.2786	300.5234
L102	LL SPULE 94 NH	300.9875	300.5234
L103	LD 1000UH10%72,00HM0,028A CHOKE DELEVAN DROSSEL1025-92	LD 037.8005	300.5234
L104	LD 0,56UH10%0,500HM0,550A CHOKE DELEVAN DROSSEL1025-14	LD 067.2834	300.5234
L113	LD 4,70UH10%1,200HM0,239A CHOKE DELEVAN DROSSEL1025-36	LD 067.2940	300.5234
L202	LD 76,7NH/33PF Q110M.KERN CHOKE COMPONEX E520HS 30000 23	300.9381	300.6030
L203	LD 2,20UH10%0,400HM0,415A CHOKE DELEVAN DROSSEL1025-28	LD 067.2905	300.6030
L204	LD 2,20UH10%0,400HM0,415A CHOKE DELEVAN DROSSEL1025-28	LD 067.2905	300.6030
L205	LD 12,0UH10%2,700HM0,160A CHOKE DELEVAN DROSSEL1025-46	LD 067.2992	300.6030
L206	EP 5NS-VERZOEGER.LTG.VAR. 5NS-DELAY LINE,VARIABLE DATA DELAY 1509-05 B	300.9775	300.6030
L207	LD 0,10UH10%0,080HM1,400A CHOKE DELEVAN DROSSEL1025-94	LD 067.2740	300.6030
L208	LD 0,10UH10%0,080HM1,400A CHOKE DELEVAN DROSSEL1025-94	LD 067.2740	300.6030
L209	LD 2,20UH10%0,400HM0,415A CHOKE DELEVAN DROSSEL1025-28	LD 067.2905	300.6030

uns alle Rechte vor

Kennzeichen Component No.	Benennung/Beschreibung Designation	Sachnummer Stock No.	enthalten in contained in
L210	LD 0,047 UH 10% CHOKE INDUSTRIA BAUREIHE1025,0,047	249.5995	300.6030
L250	LD 1,0 UH 10% 465 MIA CHOKE DELEVAN	LD 092.3153	300.5234
L401	LD 2,70UH10%0,550HM0,355A CHOKE DELEVAN DROSSEL1025-30	LD 067.2911	300.5234
L402	LD 1000UH10%72,00HM0,028A CHOKE DELEVAN DROSSEL1025-92	LD 037.8005	300.5234
L403	LD 1000UH10%72,00HM0,028A CHOKE DELEVAN DROSSEL1025-92	LD 037.8005	300.5234
L600	LD 1000UH10%72,00HM0,028A CHOKE DELEVAN DROSSEL1025-92	LD 037.8005	300.5234
L601	LD 0,12UH10%0,090HM1,300A CHOKE DELEVAN DROSSEL1025-96	LD 067.2757	300.5234
MP1 BIS/TO MP7	VL WIRE-WRAP PIN BERG NR. 75 403-001	VL 088.4507	300.5234
Q100	EQ 135MHZ 5.CL12HC-43/U-2 QUARTZ CRYSTAL UNIT QUAKE R&S-ZCHNG.090.8064	090.8064	356.1511
R50	RL 0,21W 182 OHM+-1%TK50 RESISTOR RESISTA MK1 1820HM 1% TK50	RL 092.1350	300.5234
R51	RL 0,21W 22,1 OHM+-1%TK50 RESISTOR RESISTA MK1 22,10HM 1% TK50	RL 092.1221	300.5234
R52	RL 0,35W 3,92KOHM+-1%TK50 RESISTOR RESISTA MK2	RL 083.1039	300.5234
R53	RL 0,21W 10,0 OHM+-1%TK50 RESISTOR RESISTA MK1 10,00HM 1% TK50	RL 092.1715	300.5234
R55	RL 0,21W 100 OHM+-1%TK50 DEPOS.-CARBON RESISTOR RESISTA MK1 1000HM 1% TK50	RL 092.1321	300.5234
R98	RL 0,21W 562 OHM+-1%TK50 RESISTOR RESISTA MK1 5620HM 1% TK50	RL 092.1415	300.5234
R99	RL 0,21W 1,0KOHM2% UNGEW. RESISTOR RESISTA MK1 1k 2% UNGEW.	RL 092.6075	300.5234
R100	RL 0,35W 15,0KOHM+-1%TK50 RESISTOR DRALORIC SMA0207/15K-F-D	RL 083.1400	300.5234

Für diese Unterlage behalten wir uns alle Rechte vor

Kennzeichen Component No.	Benennung/Beschreibung Designation	Sachnummer Stock No.	enthalten in contained in
R101	RL 0,35W 5,62KOHM+-1%TK50 RESISTOR DRALORIC SMA0207/5,62K-F-C	RL 082.2190	300.5234
R102	RL 0,35W 10,0KOHM+-1%TK50 RESISTOR DRALORIC SMA0207/10K-F-D	RL 083.1297	300.5234
R103	RL 0,21W 10,0 OHM+-1%TK50 RESISTOR RESISTA MK1 10,0OHM 1% TK50	RL 092.1715	300.5234
R104	RL 0,35W 562 OHM+-1%TK50 RESISTOR DRALORIC SMA0207/562OHM-F-D	RL 083.0461	300.5234
R105	RL 0,35W 56,2 OHM+-1%TK50 RESISTOR DRALORIC SMA0207/56,2OHM-F-D	RL 082.9571	300.5234
R106	RL 0,35W 6,81KOHM+-1%TK50 RESISTOR DRALORIC SMA 0207/6,81K-F-C	RL 082.2560	300.5234
R107	RK KALTL 8 OHM 0,8W PTC-RESISTOR SIEMENS Q63100-P330-A14	300.6730	356.1511
R108	RL 0,35W 6,81KOHM+-1%TK50 RESISTOR DRALORIC SMA 0207/6,81K-F-C	RL 082.2560	300.5234
R110	RL 0,21W 1,82KOHM+-1%TK50 RESISTOR RESISTA MK1 1K82 1% TK50	RL 092.1473	300.5234
R111	RL 0,21W 3,92KOHM+-1%TK50 RESISTOR RESISTA MK1 3K92 1% TK50	RL 092.1515	300.5234
R112	RL 0,21W 12,1 OHM+-1%TK50 RESISTOR RESISTA MK1	RL 092.1196	300.5234
R114	RL 0,21W 10,0 OHM+-1%TK50 RESISTOR RESISTA MK1 10,0OHM 1% TK50	RL 092.1715	300.5234
R115	RL 0,21W 330 OHM2% UNGEW. RESISTOR RESISTA MK1 330OHM 2% UNGEW.	RL 092.6017	300.5234
R116	RL 0,35W 332 OHM+-1%TK50 RESISTOR DRALORIC SMA0207/332OHM-F-D	RL 083.0255	300.5234
R201	RL 0,35W 47,5 OHM+-1%TK50 RESISTOR DRALORIC SMA0207/47,5OHM-F-D	RL 082.9507	300.6030
R202	RL 0,35W 22,1KOHM+-1%TK50 RESISTOR DRALORIC SMA/207/22,1K-F-C	RL 083.1545	300.6030
R203	RL 0,35W 10,0KOHM+-1%TK50 RESISTOR DRALORIC SMA0207/10K-F-D	RL 083.1297	300.6030
R204	RL 0,35W 681 OHM+-1%TK50 RESISTOR DRALORIC SMA0207/681OHM-F-D	RL 083.0490	300.6030
R205	RL 0,35W 121 OHM+-1%TK50 RESISTOR DRALORIC SMA0207/121OHM-F-D	RL 082.9859	300.6030

Kennzeichen Component No.	Benennung/Beschreibung Designation	Sachnummer Stock No.	enthalten in contained in
R206	RL 0,35W22,10 OHM+-1%TK50 RESISTOR DRALORIC SMA0207/22,10HM-F-D	RL 082.9188	300.6030
R207	RL 0,35W 100 OHM+-1%TK50 DEPOS.-CARBON RESISTOR DRALORIC SMA0207/100/HM-F-D	RL 082.6543	300.6030
R208	RL 0,35W 39,2KOHM+-1%TK50 RESISTOR DRALORIC SMA/207/39,2K-F-C	RL 083.1745	300.6030
R209	RL 0,35W 100KOHM+-1%TK50 RESISTOR DRALORIC SMA0207/100K-F-C	RL 082.1764	300.6030
R211	RL 0,35W 221 OHM+-1%TK50 RESISTOR DRALORIC SMA0207/2210HM-F-D	RL 083.0084	300.6030
R213	RL 0,35W 332 OHM+-1%TK50 RESISTOR DRALORIC SMA0207/3320HM-F-D	RL 083.0255	300.6030
R214	RL 0,35W 56,2 OHM+-1%TK50 RESISTOR DRALORIC SMA0207/56,20HM-F-D	RL 082.9571	300.6030
R215	RL 0,35W15 OHM 1%TK50 RESISTOR DRALORIC SMA0207/150HM-F-D	RL 082.9020	300.6030
R216	RK HEISSL500 OHM 10%0,80W THERMISTOR SIEMENS K1110 500 OHM +-10%	008.0080	300.6030
R217	RL 0,35W 100 OHM+-1%TK50 DEPOS.-CARBON RESISTOR DRALORIC SMA0207/100/HM-F-D	RL 082.6543	300.6030
R220	RL 0,35W 22,1KOHM+-1%TK50 RESISTOR DRALORIC SMA/207/22,1K-F-C	RL 083.1545	300.6030
R221	RL 0,35W 56,2KOHM+-1%TK50 RESISTOR DRALORIC SMA0207/56,2K-F-C	RL 082.2231	300.6030
R222	RL 0,35W 47,5KOHM+-1%TK50 RESISTOR DRALORIC SMA/207/47,5K-F-C	RL 083.1800	300.6030
R223	RS 0,5W100KOHM+-10%10X10X CERMET POTENTIOMETER T BOURNS 3386X-1-104	RS 087.7683	300.6030
R224	RL 0,35W 221 OHM+-1%TK50 RESISTOR DRALORIC SMA0207/2210HM-F-D	RL 083.0084	300.6030
R225	RL 0,35W 22,1KOHM+-1%TK50 RESISTOR DRALORIC SMA/207/22,1K-F-C	RL 083.1545	300.6030
R226	RL 0,35W 56,2KOHM+-1%TK50 RESISTOR DRALORIC SMA0207/56,2K-F-C	RL 082.2231	300.6030
R227	RL 0,35W 33,2KOHM+-1%TK50 RESISTOR DRALORIC SMA0207/33,2K-F-C	RL 083.1674	300.6030
R228	RL 0,35W 12,1KOHM+-1%TK50 RESISTOR DRALORIC SMA0207/12,1K-F-D	RL 083.1351	300.6030

Für diese Unterlage behalten wir uns alle Rechte vor

Kennzeichen Component No.	Benennung/Beschreibung Designation	Sachnummer Stock No.	enthalten in contained in
R229	RL 0,35W 221 OHM+-1%TK50 RESISTOR DRALORIC SMA0207/221OHM-F-D	RL 083.0084	300.6030
R231	RS 0,5W100KOHM+-10%10X10X CERMET POTENTIOMETER T BOURNS 3386X-1-104	RS 087.7683	300.6030
R232	RL 0,35W 100KOHM+-1%TK50 RESISTOR DRALORIC SMA0207/100K-F-C	RL 082.1764	300.6030
R233	RL 0,35W 100 OHM+-1%TK50 DEPOS.-CARBON RESISTOR DRALORIC SMA0207/100/HM-F-D	RL 082.6543	300.6030
R235	RL 0,35W 4,75KOHM+-1%TK50 RESISTOR DRALORIC SMA0207/4,75K-F-D	RL 083.1097	300.6030
R236	RL 0,35W 1,82KOHM+-1%TK50 RESISTOR DRALORIC SMA0207/1,82K-F-C	RL 082.2277	300.6030
R237	RL 0,35W 2,94KOHM+-1%TK50 RESISTOR DRALORIC SMA0207/2,94K-F-D	RL 083.0955	300.6030
R250	RL 0,21W 220 OHM2% UNGEW. RESISTOR RESISTA MK1 2200HM 2% UNGEW.	RL 092.5991	300.5234
R251	RL 0,21W 220 OHM2% UNGEW. RESISTOR RESISTA MK1 2200HM 2% UNGEW.	RL 092.5991	300.5234
R252	RL 0,21W 1,82KOHM+-1%TK50 RESISTOR RESISTA MK1 1K82 1% TK50	RL 092.1473	300.5234
R253	RL 0,21W 10,0 OHM+-1%TK50 RESISTOR RESISTA MK1 10,00HM 1% TK50	RL 092.1715	300.5234
R254	RL 0,21W 22 OHM2% UNGEW. RESISTOR RESISTA MK1 220HM 2% UNGEW.	RL 092.5879	300.5234
R255	RL 0,21W 10 OHM2% UNGEW. RESISTOR RESISTA MK1 100HM 2% UNGEW.	RL 092.5833	300.5234
R256	RL 0,21W 47 OHM2% UNGEW. RESISTOR RESISTA MK1 470HM 2% UNGEW.	RL 092.5910	300.5234
R257	RL 0,21W 221 OHM+-1%TK50 RESISTOR RESISTA MK1 2210HM 1% TK50	RL 092.1367	300.5234
R258	RL 0,21W 681 OHM+-1%TK50 RESISTOR RESISTA MK1 6810HM 1% TK50	RL 092.1421	300.5234
R259	RL 0,21W 562 OHM+-1%TK50 RESISTOR RESISTA MK1 5620HM 1% TK50	RL 092.1415	300.5234
R260	RL 0,21W 562 OHM+-1%TK50 RESISTOR RESISTA MK1 5620HM 1% TK50	RL 092.1415	300.5234
R261	RL 0,21W 562 OHM+-1%TK50 RESISTOR RESISTA MK1 5620HM 1% TK50	RL 092.1415	300.5234

Kennzeichen Component No.	Benennung/Beschreibung Designation	Sachnummer Stock No.	enthalten in contained in
R262	RL 0,21W 562 OHM+-1%TK50 RESISTOR RESISTA MK1 5620HM 1% TK50	RL 092.1415	300.5234
R263	RL 0,35W 332 OHM+-1%TK50 RESISTOR DRALORIC SMA0207/3320HM-F-D	RL 083.0255	300.5234
R401	RL 0,21W 75,0 OHM+-1%TK50 RESISTOR DRALORIC SMA0204 75 OHM 1%	RL 092.0119	300.5234
R402	RL 0,21W 274 OHM+-1%TK50 RESISTOR RESISTA MK1 2740HM 1% TK50	RL 092.1373	300.5234
R403	RL 0,21W 562 OHM+-1%TK50 RESISTOR RESISTA MK1 5620HM 1% TK50	RL 092.1415	300.5234
R404	RL 0,21W 56,2 OHM+-1%TK50 RESISTOR RESISTA MK1 56,20HM 1% TK50	RL 092.1280	300.5234
R405	RL 0,35W 100 OHM+-1%TK50 DEPOS.-CARBON RESISTOR DRALORIC SMA0207/100/HM-F-D	RL 082.6543	300.5234
R406	RL 0,21W 562 OHM+-1%TK50 RESISTOR RESISTA MK1 5620HM 1% TK50	RL 092.1415	300.5234
R407	RL 0,21W 681 OHM+-1%TK50 RESISTOR RESISTA MK1 6810HM 1% TK50	RL 092.1421	300.5234
R408	RL 0,21W 200 KOHM+-1%TK50 RESISTOR RESISTA MK1 200K 1% TK50	092.0531	300.5234
R409	RL 0,35W 200KOHM+-1%TK50 RESISTOR DRALORIC SMA0207/200K-F-D	RL 083.2235	300.5234
R410	RL 0,35W 10,0KOHM+-1%TK50 RESISTOR DRALORIC SMA0207/10K-F-D	RL 083.1297	300.5234
R411	RL 0,35W 56,2KOHM+-1%TK50 RESISTOR DRALORIC SMA0207/56,2K-F-C	RL 082.2231	300.5234
R412	RL 0,35W 392 KOHM+-1%TK50 RESISTOR DRALORIC SMA0207/392K-F-C	RL 083.2512	300.5234
R413	RL 0,35W2,21MOHM+-1%TK50 METALFILMRESISTOR RESISTA MK2 2,21MOHM 1% TK50	RL 099.8173	300.5234
R414	RL 0,21W 1,00KOHM+-1%TK50 RESISTOR RESISTA MK1 1K00 1% TK50	RL 092.1444	300.5234
R416	RL 0,21W 56,2KOHM+-1%TK50 RESISTOR RESISTA MK1 56K20 1% TK50	RL 092.1650	300.5234
R417	RL 0,21W 182 KOHM+-1%TK50 RESISTOR DRALORIC SMA0204 182KOHM 1%	RL 092.0525	300.5234
R418	RL 0,21W 22,1KOHM+-1%TK50 RESISTOR RESISTA MK1 22K1 1% TK50	RL 092.1609	300.5234

Für diese Unterlage behalten wir uns alle Rechte vor

Kennzeichen Component No.	Benennung/Beschreibung Designation	Sachnummer Stock No.	enthalten in contained in
R419	RL 0,21W 562 OHM+-1%TK50 RESISTOR RESISTA MK1 5620HM 1% TK50	RL 092.1415	300.5234
R420	RS 0,5W500 OHM+-10%10X10X CERMET POTENTIOMETER T BOURNS 3386F-1-501	RS 247.7878	300.5234
R421	RL 0,35W 1KOHM+-1%TK50 RESISTOR DRALORIC SMA0207/1K-F-C	RL 082.2160	300.5234
R422	RL 0,21W 562 OHM+-1%TK50 RESISTOR RESISTA MK1 5620HM 1% TK50	RL 092.1415	300.5234
R423	RL 0,35W 47,5 OHM+-1%TK50 RESISTOR DRALORIC SMA0207/47,5OHM-F-D	RL 082.9507	300.5234
R425	RL 0,21W 39,2KOHM+-1%TK50 RESISTOR RESISTA MK1 39K2 1% TK50	RL 092.1638	300.5234
R430	RL 0,35W 82,5KOHM+-1%TK50 RESISTOR DRALORIC SMA0207/82,5K-F-C	RL 082.2302	300.5234
R602	RL 0,21W 1,82KOHM+-1%TK50 RESISTOR RESISTA MK1 1K82 1% TK50	RL 092.1473	300.5234
R603	RL 0,21W 1,82KOHM+-1%TK50 RESISTOR RESISTA MK1 1K82 1% TK50	RL 092.1473	300.5234
R604	RL 0,21W 10 OHM2% UNGEW. RESISTOR RESISTA MK1 10OHM 2% UNGEW.	RL 092.5833	300.5234
R605	RL 0,21W 100 OHM2% UNGEW. RESISTOR RESISTA MK1 100OHM 2% UNGEW.	RL 092.5956	300.5234
R606	RL 0,21W 10,0 OHM+-1%TK50 RESISTOR RESISTA MK1 10,00HM 1% TK50	RL 092.1715	300.5234
R607	RL 0,21W 150 OHM2% UNGEW. RESISTOR RESISTA MK1 150OHM 2% UNGEW.	RL 092.5979	300.5234
R608	RL 0,35W 82,5 OHM+-1%TK50 RESISTOR DRALORIC SMA0207/82,5OHM-F-D	RL 082.9707	300.5234
R609	RL 0,21W 82 OHM2% UNGEW. RESISTOR RESISTA MK1 82OHM 2% UNGEW.	RL 092.5940	300.5234
R702	RL 0,21W 1,82KOHM+-1%TK50 RESISTOR RESISTA MK1 1K82 1% TK50	RL 092.1473	300.5234
R703	RL 0,21W 1,82KOHM+-1%TK50 RESISTOR RESISTA MK1 1K82 1% TK50	RL 092.1473	300.5234
R704	RL 0,21W 39 OHM2% UNGEW. RESISTOR RESISTA MK1 39OHM 2% UNGEW.	RL 092.5904	300.5234
R705	RL 0,21W 56,2 OHM+-1%TK50 RESISTOR RESISTA MK1 56,2OHM 1% TK50	RL 092.1280	300.5234

Kennzeichen Component No.	Benennung/Beschreibung Designation	Sachnummer Stock No.	enthalten in contained in
R706	RL 0,21W 10,0 OHM+-1%TK50 RESISTOR RESISTA MK1 10,00HM 1% TK50	RL 092.1715	300.5234
R707	RL 0,21W 220 OHM2% UNGEW. RESISTOR RESISTA MK1 2200HM 2% UNGEW.	RL 092.5991	300.5234
R708	RL 0,35W 332 OHM+-1%TK50 RESISTOR DRALORIC SMA0207/3320HM-F-D	RL 083.0255	300.5234
ST1	FP EINZELKONTAKTSTIFT SINGLE-CONTACT PIN ULMIC R&S.ZCHNG.300.8804	300.8804	300.5257
BIS/TO ST4			
ST80	ENTHALTEN IN/INCLUDED IN LEITERPLATTE/PCB		300.5257
ST84	FJ EINBAUWINKELST. SMC ANGLE CONNECTOR RADIALL R 112 669	FJ 249.9684	300.5234
ST85	FJ EINBAUWINKELST. SMC ANGLE CONNECTOR RADIALL R 112 669	FJ 249.9684	300.5234
ST86	FJ EINBAUWINKELST. SMC ANGLE CONNECTOR RADIALL R 112 669	FJ 249.9684	300.5234
ST88	FJ EINBAUSTECKER SYST.SMC PLUG RADIALL R112 553	FJ 070.0322	
ST89	FJ EINBAUWINKELST. SMC ANGLE CONNECTOR RADIALL R 112 669	FJ 249.9684	300.6030
T50	AK 2N2369A NPN 15V 200MA TRANSISTOR VALVO 2N2369A	AK 010.4680	300.5234
T100	AK BFW30 NPN 10V >1GHZ TRANSISTOR VALVO BFW30	AK 010.6582	300.5234
T102	AK BFW30 NPN 10V >1GHZ TRANSISTOR VALVO BFW30	AK 010.6582	300.5234
T201	AM BF910 N-DUAL-G.MOSF MOS-FET TEXAS BF910	300.6847	300.6030
T202	AK BFT12 NPN 25V 2GHZ TRANSISTOR SIEMENS BFT12	AK 249.8236	300.6030
T203	AM BF910 N-DUAL-G.MOSF MOS-FET TEXAS BF910	300.6847	300.6030
T204	AK BFX48 PNP 30V 100MA TRANSISTOR SGS BFX48	AK 010.3202	300.6030
T205	AK BFX48 PNP 30V 100MA TRANSISTOR SGS BFX48	AK 010.3202	300.6030

Für diese Unterlage behalten wir uns alle Rechte vor

Kennzeichen Component No.	Benennung/Beschreibung Designation	Sachnummer Stock No.	enthalten in contained in
T206	AM BF910 N-DUAL-G.MOSF MOS-FET TEXAS BF910	300.6847	300.6030
T207	AM BF910 N-DUAL-G.MOSF MOS-FET TEXAS BF910	300.6847	300.6030
T208	AM BF910 N-DUAL-G.MOSF MOS-FET TEXAS BF910	300.6847	300.6030
T209	AL BD139 NPN 80V 1A0 TRANSISTOR VALVO BD139	AL 274.8994	300.6030
T210	AK BCY79IX PNP 45V 200MA TRANSISTOR SIEMENS BCY79IX	AK 010.3777	300.6030
T250	AK BFW30 NPN 10V >1GHZ TRANSISTOR VALVO BFW30	AK 010.6582	300.5234
T251	AK BFW30 NPN 10V >1GHZ TRANSISTOR VALVO BFW30	AK 010.6582	300.5234
T400	AK BSX29 PNP 12V 200MA TRANSISTOR SGS BSX29	AK 010.3031	300.5234
T401	AK BSX29 PNP 12V 200MA TRANSISTOR SGS BSX29	AK 010.3031	300.5234
T402	AK BSX29 PNP 12V 200MA TRANSISTOR SGS BSX29	AK 010.3031	300.5234
T403	AL BDX36 NPN 60V 5A0 TRANSISTOR VALVO BDX 36	AL 332.4291	300.5234
T601	AK BFW30 NPN 10V >1GHZ TRANSISTOR VALVO BFW30	AK 010.6582	300.5234
T701	AK BFW30 NPN 10V >1GHZ TRANSISTOR VALVO BFW30	AK 010.6582	300.5234
Y51	BD QUARZEINHEIT	356.1511	300.5234 - ENDE -

Nachdruck auch auszugsweise verboten

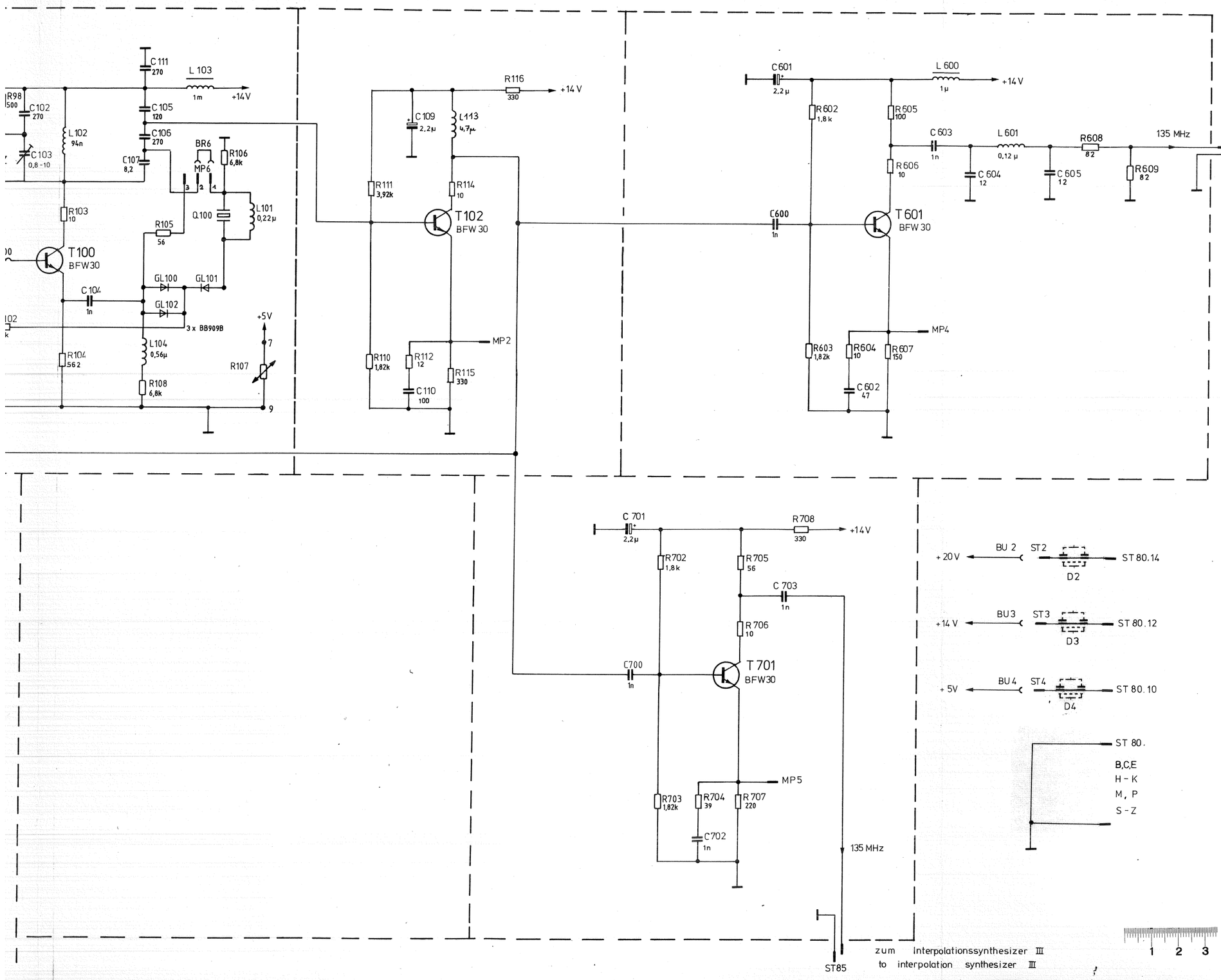

(Platte) Interpolationssynthesizer II (Pcb) Interpolation synthesizer II 300.5234	
Zuführung Interpolationssynthesizer Feed Interpolation synthesizer 300.5257	

Stromlauf zu
Interpolationssyntesizer II
Interpolation synthesizer II

Zeichn. Nr. 300.7714 S
Blatt-Nr. 1 v. 2 Blatt
300.1000 V
300.1000

z. Puffer
to Buffer

vom Puffer
from Buffer

zur Phasenregelg.
to Phase control

(ST87) (ST88) (ST89)

Pufferteiler
Buffer divider
hierzu 300.7714.S Bl.2
seealso

+14V
BU5
C1
8
+14V

zum Interpolationssynthesizer III,
NF-Generator und Eichleitung

to Interpolation synthesizer III,
AF-generator and attenuator

ST 86

vom Quarzoszillator
from crystal oszillator

(BU81)

10MHz

K1

K2

45 MHz

1MHz

+5V
+20V
+14V

T403 BDX36
T400 BSX29
T401 BSX29
T402 BSX29
T50 2N 2369
T100 BFW30
T251 BFW30
T250 BFW30

B400 SN74S 196
B401 LF256H
B402 TCA 965
B50 SN 74 LS 290
B250 MC 10231

GL400 1N 4448
GL401 2x BAV45
GL402
GL99 HP2800
GL250 1N4448
GL251 1N4448

BR1
MP1
MP3
MP7

R420 500
R421 1k
R422 560
R423 47
R50 180
R51 22
R52 3,9k
R53 10
R55 100
R98 500
R99 1k
R100 15k
R101 5,6k
R102 10k
R103 10
R104 562
R252 1,8k
R253 10
R254 22
R255 10
R256 47
R257 220
R258 680
R259 560
R260 560
R261 560
R262 560
R263 330
R251 220
R250 220
R249 1k
R248 1k
R247 1k
R246 1k
R245 1k
R244 1k
R243 1k
R242 1k
R241 1k
R240 1k
R239 1k
R238 1k
R237 1k
R236 1k
R235 1k
R234 1k
R233 1k
R232 1k
R231 1k
R230 1k
R229 1k
R228 1k
R227 1k
R226 1k
R225 1k
R224 1k
R223 1k
R222 1k
R221 1k
R220 1k
R219 1k
R218 1k
R217 1k
R216 1k
R215 1k
R214 1k
R213 1k
R212 1k
R211 1k
R210 1k
R209 1k
R208 1k
R207 1k
R206 1k
R205 1k
R204 1k
R203 1k
R202 1k
R201 1k
R200 1k
R199 1k
R198 1k
R197 1k
R196 1k
R195 1k
R194 1k
R193 1k
R192 1k
R191 1k
R190 1k
R189 1k
R188 1k
R187 1k
R186 1k
R185 1k
R184 1k
R183 1k
R182 1k
R181 1k
R180 1k
R179 1k
R178 1k
R177 1k
R176 1k
R175 1k
R174 1k
R173 1k
R172 1k
R171 1k
R170 1k
R169 1k
R168 1k
R167 1k
R166 1k
R165 1k
R164 1k
R163 1k
R162 1k
R161 1k
R160 1k
R159 1k
R158 1k
R157 1k
R156 1k
R155 1k
R154 1k
R153 1k
R152 1k
R151 1k
R150 1k
R149 1k
R148 1k
R147 1k
R146 1k
R145 1k
R144 1k
R143 1k
R142 1k
R141 1k
R140 1k
R139 1k
R138 1k
R137 1k
R136 1k
R135 1k
R134 1k
R133 1k
R132 1k
R131 1k
R130 1k
R129 1k
R128 1k
R127 1k
R126 1k
R125 1k
R124 1k
R123 1k
R122 1k
R121 1k
R120 1k
R119 1k
R118 1k
R117 1k
R116 1k
R115 1k
R114 1k
R113 1k
R112 1k
R111 1k
R110 1k
R109 1k
R108 1k
R107 1k
R106 1k
R105 1k
R104 1k
R103 1k
R102 1k
R101 1k
R100 1k
R99 1k
R98 1k
R97 1k
R96 1k
R95 1k
R94 1k
R93 1k
R92 1k
R91 1k
R90 1k
R89 1k
R88 1k
R87 1k
R86 1k
R85 1k
R84 1k
R83 1k
R82 1k
R81 1k
R80 1k
R79 1k
R78 1k
R77 1k
R76 1k
R75 1k
R74 1k
R73 1k
R72 1k
R71 1k
R70 1k
R69 1k
R68 1k
R67 1k
R66 1k
R65 1k
R64 1k
R63 1k
R62 1k
R61 1k
R60 1k
R59 1k
R58 1k
R57 1k
R56 1k
R55 1k
R54 1k
R53 1k
R52 1k
R51 1k
R50 1k
R49 1k
R48 1k
R47 1k
R46 1k
R45 1k
R44 1k
R43 1k
R42 1k
R41 1k
R40 1k
R39 1k
R38 1k
R37 1k
R36 1k
R35 1k
R34 1k
R33 1k
R32 1k
R31 1k
R30 1k
R29 1k
R28 1k
R27 1k
R26 1k
R25 1k
R24 1k
R23 1k
R22 1k
R21 1k
R20 1k
R19 1k
R18 1k
R17 1k
R16 1k
R15 1k
R14 1k
R13 1k
R12 1k
R11 1k
R10 1k
R9 1k
R8 1k
R7 1k
R6 1k
R5 1k
R4 1k
R3 1k
R2 1k
R1 1k

R400 75
R401 75
R402 270
R403 560
R404 56
R405 100
R406 560
R407 680
R408 200k
R409 200k
R410 10k
R411 56k
R412 390k
R413 2,2M
R414 1 k
R415 56,2 k
R416 56,2 k
R417 182k
R418 22 k
R419 560
R425 39k

C50 47µ
C51 100n
C52 1,8n
C100 1n
C101 2,2µ
C102 270
C103 0,8 -10
C104 1n
C107 8,2
C110 10n
C111 1n
C112 1n
C113 1n
C114 1n
C115 1n
C116 1n
C117 1n
C118 1n
C119 1n
C120 1n
C121 1n
C122 1n
C123 1n
C124 1n
C125 1n
C126 1n
C127 1n
C128 1n
C129 1n
C130 1n
C131 1n
C132 1n
C133 1n
C134 1n
C135 1n
C136 1n
C137 1n
C138 1n
C139 1n
C140 1n
C141 1n
C142 1n
C143 1n
C144 1n
C145 1n
C146 1n
C147 1n
C148 1n
C149 1n
C150 1n
C151 1n
C152 1n
C153 1n
C154 1n
C155 1n
C156 1n
C157 1n
C158 1n
C159 1n
C160 1n
C161 1n
C162 1n
C163 1n
C164 1n
C165 1n
C166 1n
C167 1n
C168 1n
C169 1n
C170 1n
C171 1n
C172 1n
C173 1n
C174 1n
C175 1n
C176 1n
C177 1n
C178 1n
C179 1n
C180 1n
C181 1n
C182 1n
C183 1n
C184 1n
C185 1n
C186 1n
C187 1n
C188 1n
C189 1n
C190 1n
C191 1n
C192 1n
C193 1n
C194 1n
C195 1n
C196 1n
C197 1n
C198 1n
C199 1n
C200 1n
C201 1n
C202 1n
C203 1n
C204 1n
C205 1n
C206 1n
C207 1n
C208 1n
C209 1n
C210 1n
C211 1n
C212 1n
C213 1n
C214 1n
C215 1n
C216 1n
C217 1n
C218 1n
C219 1n
C220 1n
C221 1n
C222 1n
C223 1n
C224 1n
C225 1n
C226 1n
C227 1n
C228 1n
C229 1n
C230 1n
C231 1n
C232 1n
C233 1n
C234 1n
C235 1n
C236 1n
C237 1n
C238 1n
C239 1n
C240 1n
C241 1n
C242 1n
C243 1n
C244 1n
C245 1n
C246 1n
C247 1n
C248 1n
C249 1n
C250 1n
C251 1n
C252 1n
C253 2.2 µ
C254 10n
C255 1n
C256 1n
C257 1n
C258 1n
C259 1n
C260 1n
C261 1n
C262 1n
C263 1n
C264 1n
C265 1n
C266 1n
C267 1n
C268 1n
C269 1n
C270 1n
C271 1n
C272 1n
C273 1n
C274 1n
C275 1n
C276 1n
C277 1n
C278 1n
C279 1n
C280 1n
C281 1n
C282 1n
C283 1n
C284 1n
C285 1n
C286 1n
C287 1n
C288 1n
C289 1n
C290 1n
C291 1n
C292 1n
C293 1n
C294 1n
C295 1n
C296 1n
C297 1n
C298 1n
C299 1n
C300 1n
C301 1n
C302 1n
C303 1n
C304 1n
C305 1n
C306 1n
C307 1n
C308 1n
C309 1n
C310 1n
C311 1n
C312 1n
C313 1n
C314 1n
C315 1n
C316 1n
C317 1n
C318 1n
C319 1n
C320 1n
C321 1n
C322 1n
C323 1n
C324 1n
C325 1n
C326 1n
C327 1n
C328 1n
C329 1n
C330 1n
C331 1n
C332 1n
C333 1n
C334 1n
C335 1n
C336 1n
C337 1n
C338 1n
C339 1n
C340 1n
C341 1n
C342 1n
C343 1n
C344 1n
C345 1n
C346 1n
C347 1n
C348 1n
C349 1n
C350 1n
C351 1n
C352 1n
C353 1n
C354 1n
C355 1n
C356 1n
C357 1n
C358 1n
C359 1n
C360 1n
C361 1n
C362 1n
C363 1n
C364 1n
C365 1n
C366 1n
C367 1n
C368 1n
C369 1n
C370 1n
C371 1n
C372 1n
C373 1n
C374 1n
C375 1n
C376 1n
C377 1n
C378 1n
C379 1n
C380 1n
C381 1n
C382 1n
C383 1n
C384 1n
C385 1n
C386 1n
C387 1n
C388 1n
C389 1n
C390 1n
C391 1n
C392 1n
C393 1n
C394 1n
C395 1n
C396 1n
C397 1n
C398 1n
C399 1n
C400 100n
C401 100n
C402 100
C403 2,2µ
C404 68
C405 47
C406 1µ
C407 47
C408 1µ
C409 100µ
C410 10n
C411 220n
C412 22µ
C413 1n

L100
L102 94n
L250 1µ
L401 2,7µ
L402 1m
L403 1m

MP1
MP3
MP7

ST1
ST 80. 2
D1
BU 1

K1
K2

5:1
10:1
3:1

Änd. zust.	Änd. Mitlg. Nr.	Datum	Name
A	—	6.79	LS
B	—	6.79	LS
C	—	5.80	LS
D	—	12.80	LS
E	27499	7.81	Ls
F	27860	11.82	Gs.
G	30455	9.83	gs
3	31057	12.83	ls
K	31341	6.84	GS
N	32288	11.84	GS
M	32942	8.2	GS.

Zeichn.-Nr. PF 095.3531

	Datum	Name
gezeichnet	6.7	G.
bearbeitet		
geprüft	2.84	
normgepr.		

Diese Zeichnung ist unser Eigentum, Verwendung, Mitteilung an andere ist unbefugte Verwertung, strafbar und schadenersatzpflichtig.

ROHDE & SCHWARZ · MÜNCHEN

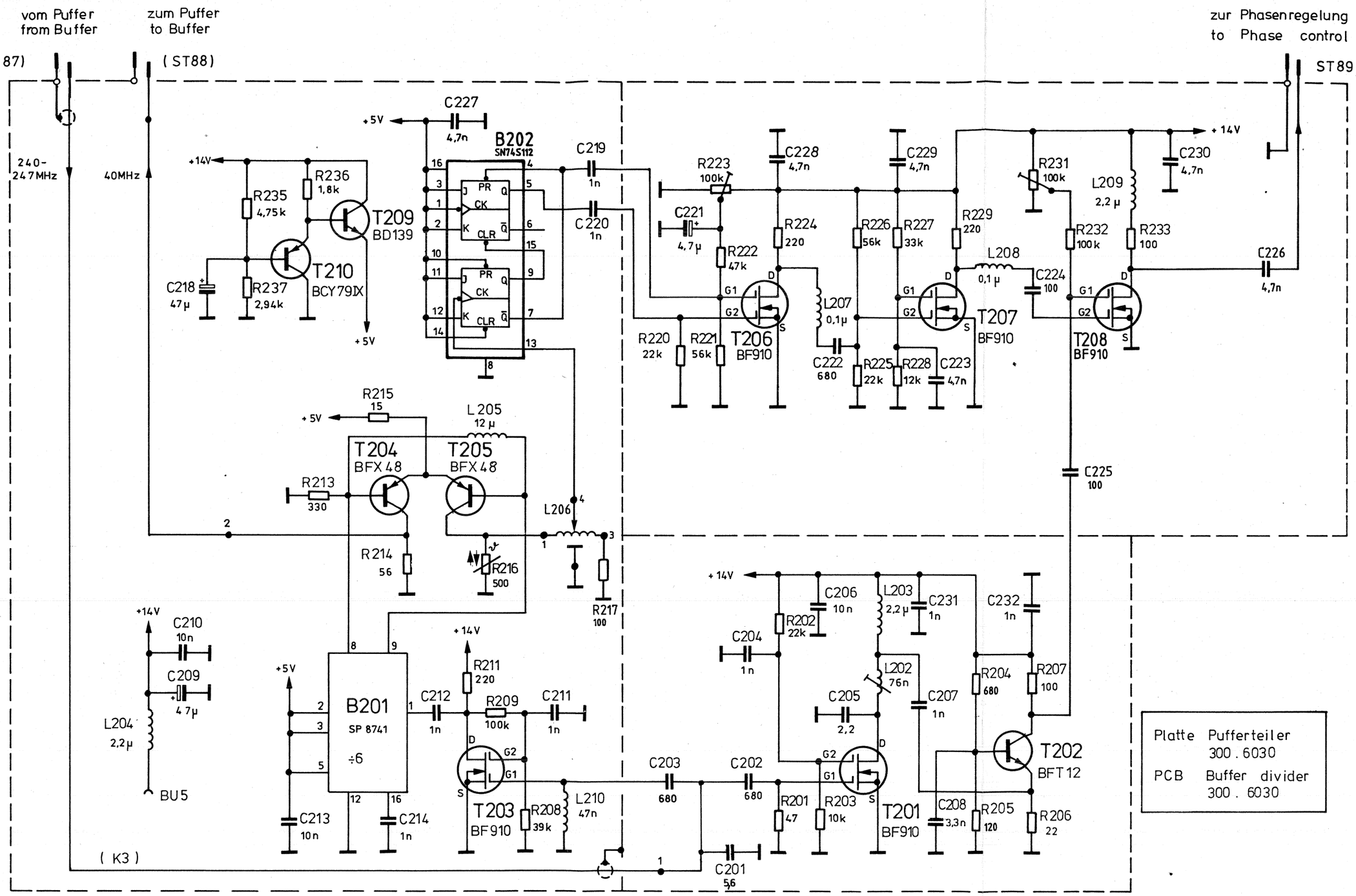

Änd-zust.	Änd. Mittlg. Nr.	Datum	Name

Änd-zust.	Änd. Mittlg. Nr.	Datum	Name

Diese Zeichnung ist unser Eigentum. Vervielfältigung, unbefugte Verwertung, Mitteilung an andere ist strafbar und schadenersatzpflichtig.

ROHDE & SCHWARZ · MÜNCHEN

Änd-zust.	Änd. Mittlg. Nr.	Datum	Name
A	—	12.80	LS
B	27860	9.81	Ls
F	27860	11.82	GS
G	30063	4.83	gs
H	30455	9.83	gs

1 GME	Datum	Name
gezeichnet	1.4.80	Hg
bearbeitet	04.80	Ls
geprüft	4.80	[illegible]
normgepr		

Stromlauf zu **Interpolationssynthesizer II**
Interpolation synthesizer II

Z

Zeichn. Nr. 300.7714 S | Bl. 2
reg. i.V. 300.1000 V | erste Z. 300.1000

PF 095 4096

Ansicht und Leitungsführung Bauteilseite
View of tracks on component side

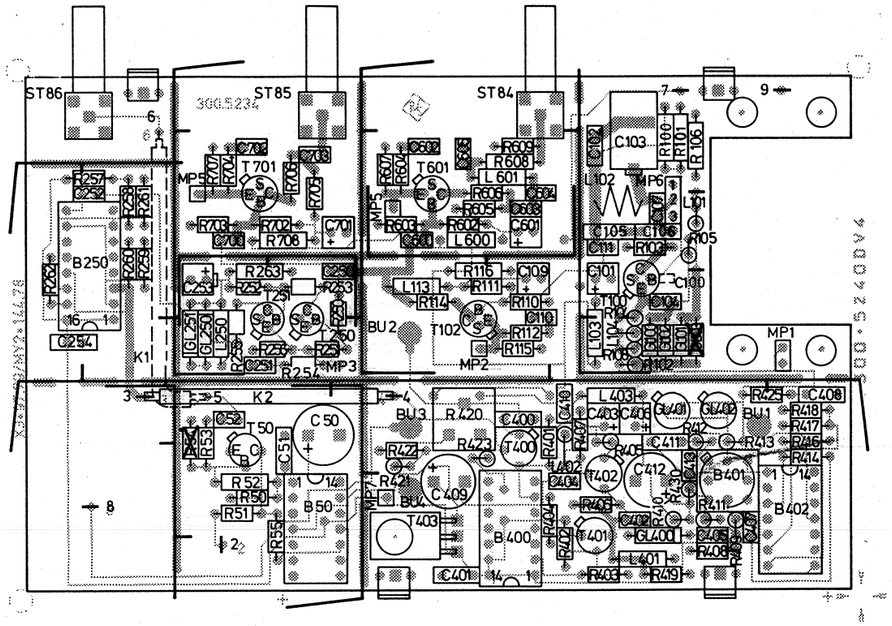

Ansicht und Leitungsführung Lötseite
View of tracks on solder side

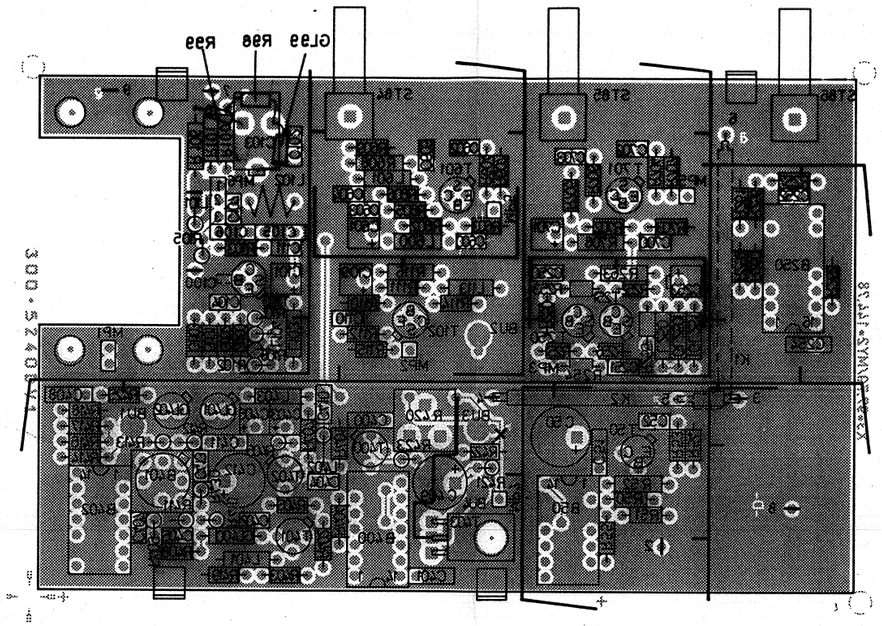

G	31057	12.83	LS	Maße ohne Toleranzangabe		Maßstab 1 : 1
H	31341	6.84	GS			Halbzeug, Werkstoff
J	32288	11.84	GS			
				1GMA	Tag / Name	Benennung: Interpolationsynthesizer II Z
				Bearb	12.83 / LS	
				Gepr		
				Norm		
And Zust	Anderungs-Mitteilung	Tag	Name	ROHDE & SCHWARZ		Zeichn-Nr 300.5234 Blatt-Nr 2
				zu Gerat SMPC		reg : V 300.1000 V erste Z 300.7714

Für diese Unterlage behalten wir uns alle Rechte vor.

ISO-Projektion Methode E

PF 095 2493-0781

07 6001 81

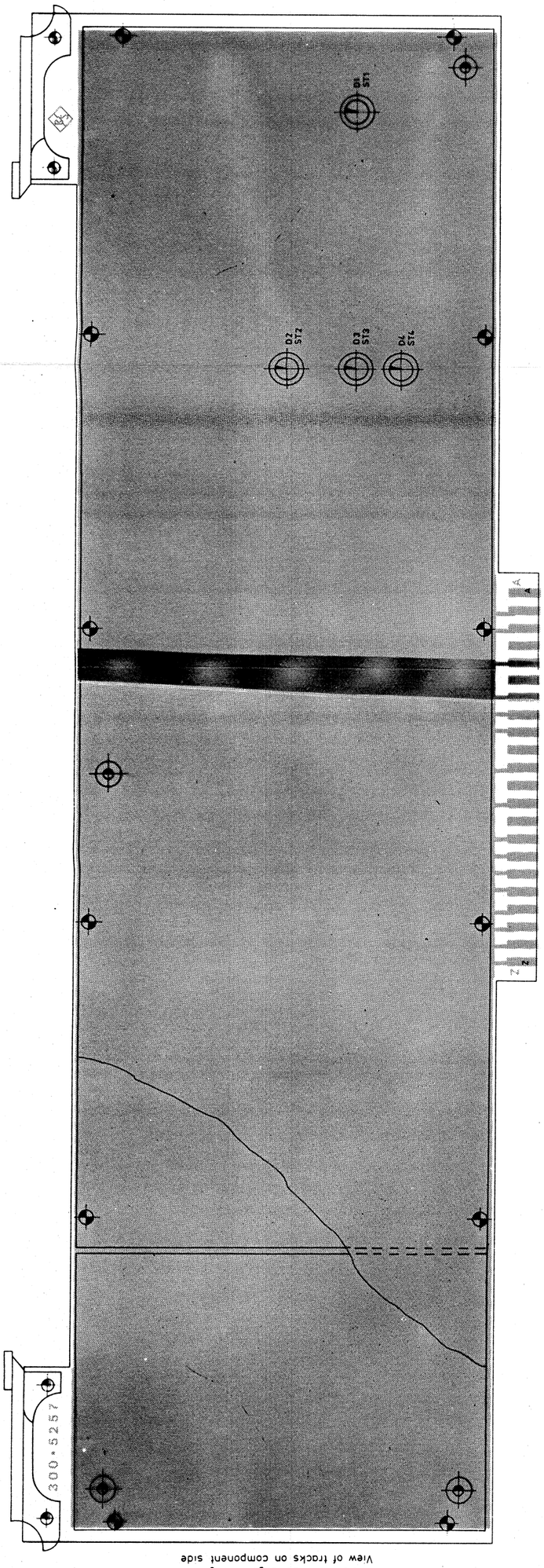

Ansicht und Leitungsführung Bauteilseite
View of tracks on component side

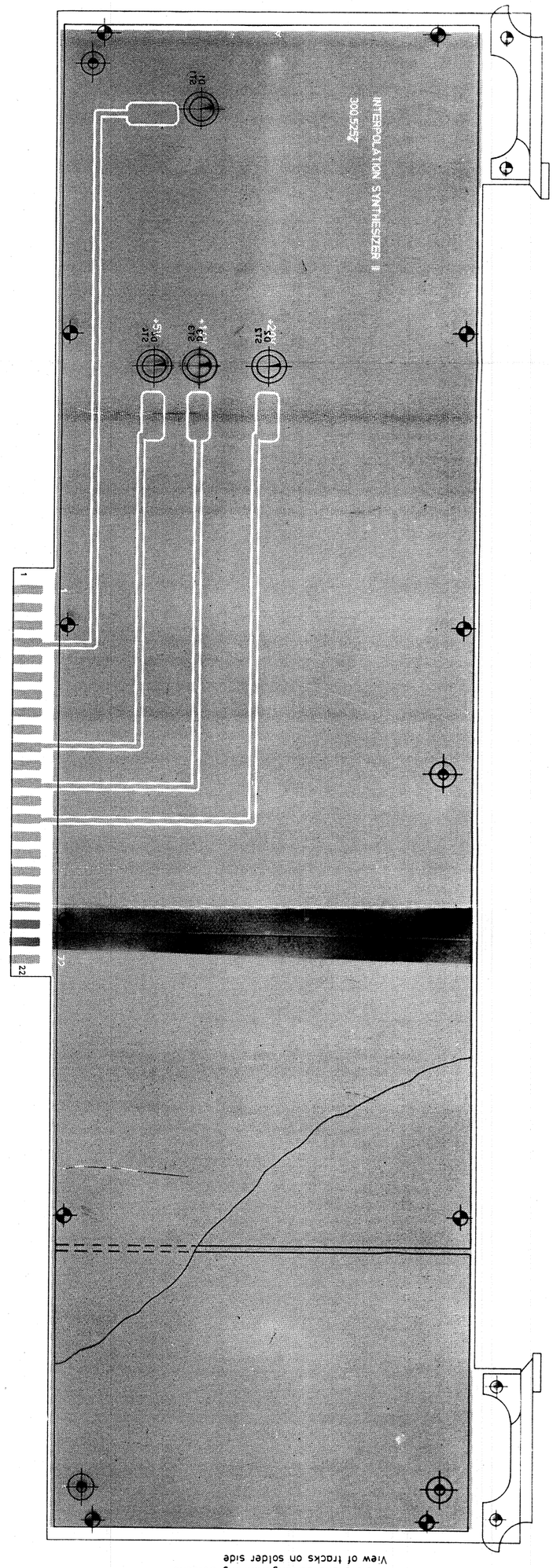

Ansicht und Leitungsführung Lotseite
View of tracks on solder side

A	30.5.79 LS		
		IGMA	
		30.5.79	LS
		6.79	LS
		ROHDE & SCHWARZ	
		SMPC	

Zuführung-Interpol II
Feed interpolation synthesizer

Z

300 5257

300 1000V

300 7714

Ansicht und Leitungsführung Bauteilseite
View of tracks on component side

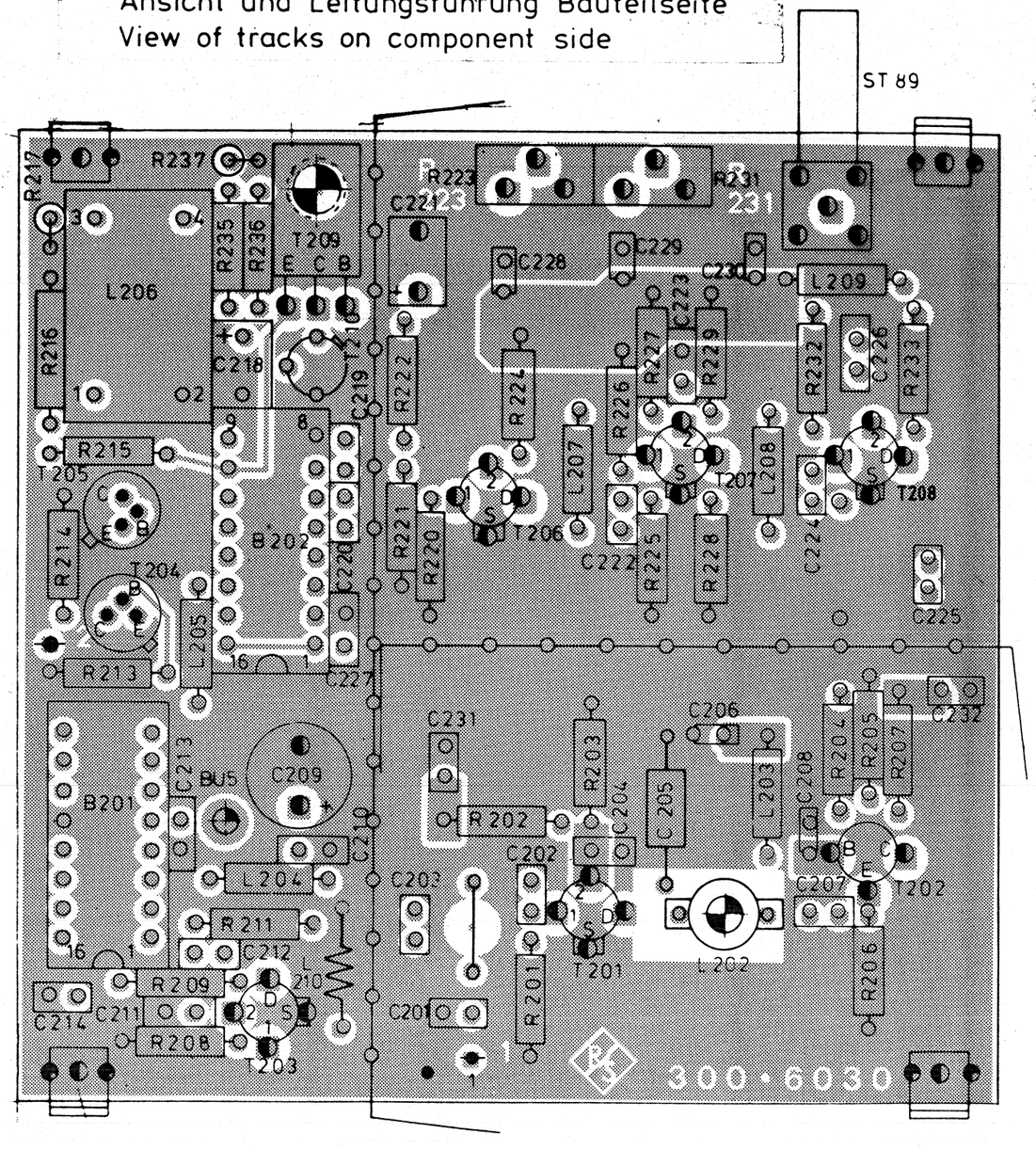

Ansicht und Leitungsführung Lötseite
View of tracks on solder side

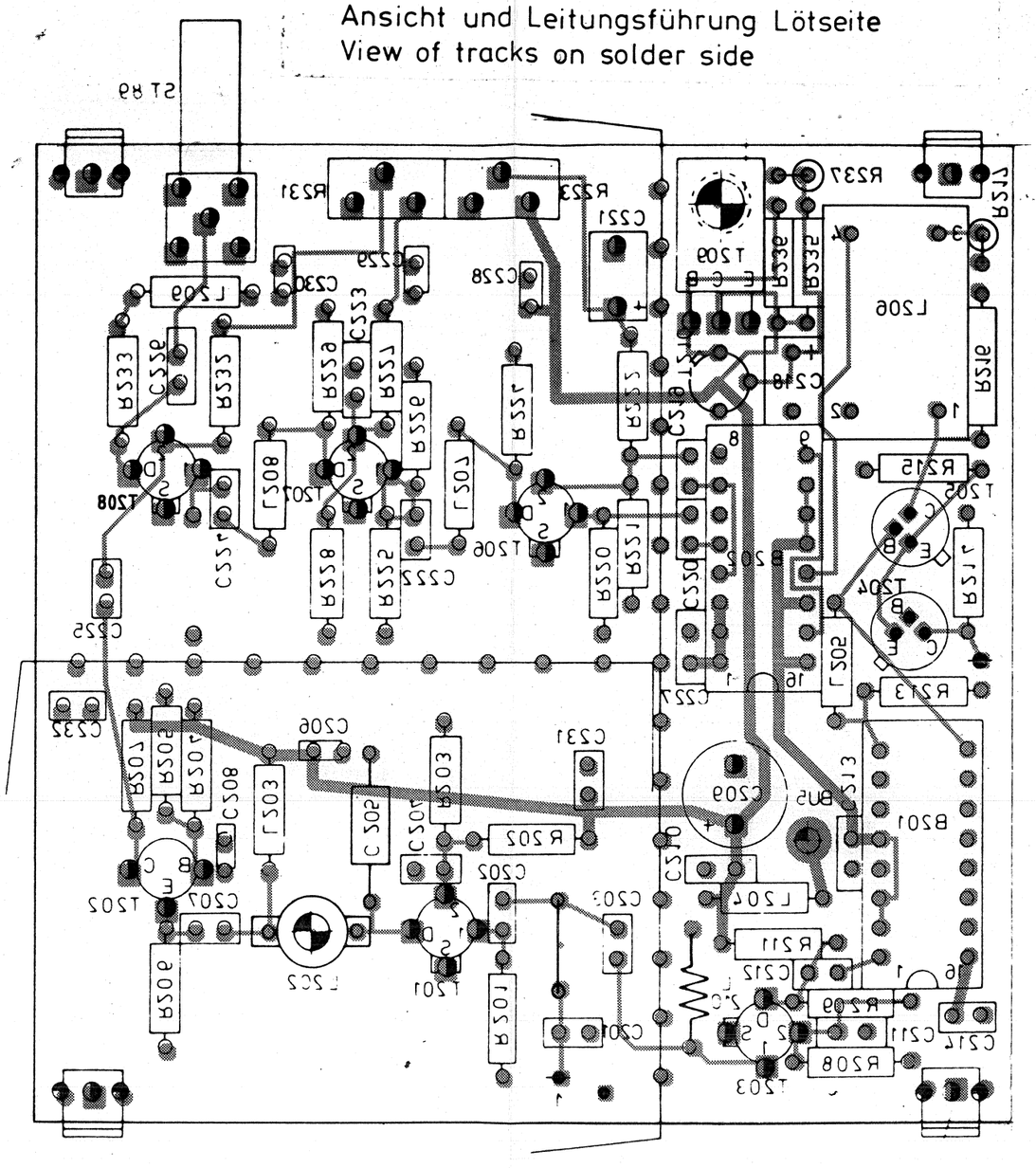

D	27860	21.9.81	LS			Maßstab 1 : 1
E	27860	11.82	LS			
F	30063	4.83	gs			
G	30455	9.83	gs			
				1GMA	21.9.81	LS
						Pufferteiler Z
				ROHDE & SCHWARZ SMPC		300.6030 2
						300.1000V 300.7714

ROHDE&SCHWARZ

SERVICE INSTRUCTIONS FOR

Interpolation Synthesizer III

300.4415 (Y6)

Table of Contents

		Page
5	Service Instructions for Interpolation Synthesizer III 300.4415 (Y6)	5.1
5.1	Circuit Description	5.1
5.1.1	Divider Loop	5.1
5.1.2	Output Stage	5.2
5.2	Checking and Adjusting	5.3
5.2.1	Checking and Adjusting the Oscillator (C207, C208)	5.3
5.2.2	Adjusting the 63-MHz Circuit (L350)	5.3
5.2.3	Adjusting the 47.8 to 54.8-MHz Band-pass Filter (L403, L404, L405, L503)	5.3
5.2.4	Adjusting the 240 to 247-MHz Band-pass Filter (C6, C8, C10)	5.4
5.2.5	Checking and Adjusting the Output Level (R7)	5.4
5.2.6	Checking the Synchronization and Switching Time ...	5.4
5.2.7	Checking and Adjusting the Supply Voltage B (R602)	5.4
5.3	Troubleshooting	5.5
5.3.1	DC Nominal Values	5.5
5.3.2	AC Nominal Values	5.5
5.4	Interfaces	5.6
5.4.1	Analog Interface	5.6
5.4.2	Digital Interface	5.7

Parts list
Circuit diagram
Components location plan

5. Service Instructions for Interpolation Synthesizer III 300.4415 (Y6)

5.1 Circuit Description

(See circuit diagram 300.4415 S and Fig. 5-2)

Y6 consists of a synthesizer which produces an output frequency of 240 to 247 MHz with the aid of programmable dividers and a 100-kHz reference frequency. By adding the fine resolution of Y4 to the control loop, a frequency resolution of 1.2 MHz is obtained.

5.1.1 Divider Loop

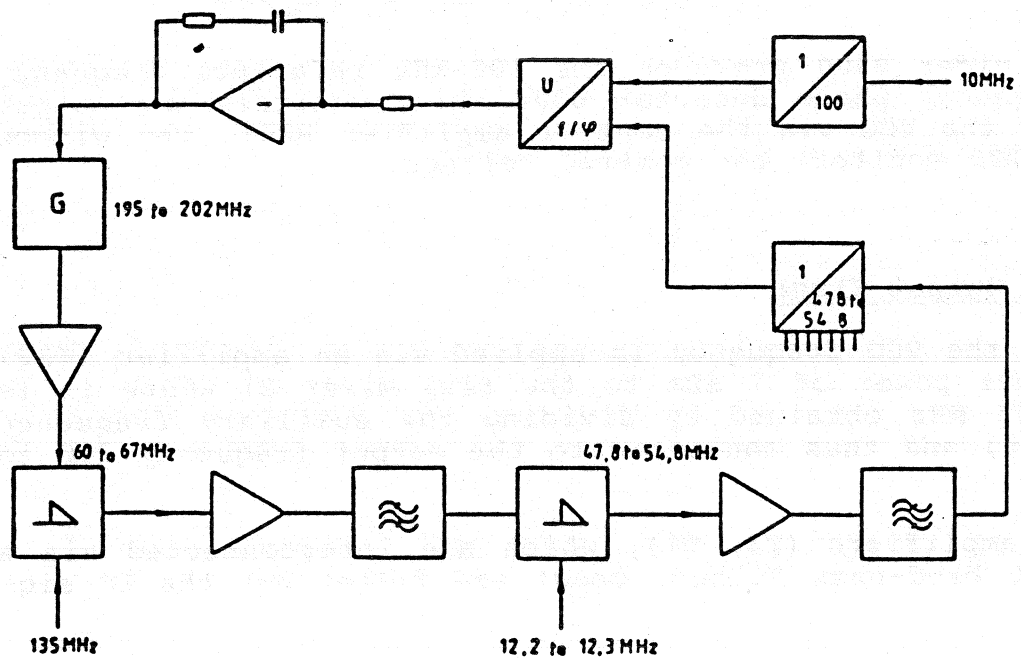

Fig. 5-1 Block diagram of the divider loop

The VCO combined with a FET (T201) forms a Clapp circuit which oscillates at a frequency of 195 to 202 MHz. Following a buffer stage (T200) an amplifier is connected supplying an output power of 7 dBm to the ring mixer.

The output frequency of the VCO is mixed with 135 MHz in B300 to obtain between 60 and 67 MHz. The IF power of B300 is boosted in a three-stage amplifier (T350, T400, T401) to 7 dBm.

The fine resolution of Y4 is added at B400 so that an IF of 47.8 to 54.8 MHz is obtained. A three-stage amplifier (T402, T403, T404) with a multisection band-pass filter drives the programmable divider B501 to B507. The division factor d of the divider determines the IF at B400 and, as a result, the output frequency of the interpolation oscillator III.

Example:

d = 500	IF_{B400}	50 MHz
	+	12.2 to 12.3 MHz
	+	135 MHz
		197.2 to 197.3 MHz at the VCO

The 100/1 divider B500 produces the 100-kHz reference frequency for the frequency phase detector B202 which controls the output frequency of the VCO via the control amplifier B201. The window comparator B200 monitors the control voltage.

5.1.2 Output Stage

In addition, the VCO frequency is applied via an amplifier (T32) with an output power of 7 dBm to the ring mixer B1 where it is mixed with 45 MHz obtained by dividing the auxiliary frequency 135 MHz (ST98) and thus converted to the output frequency 240 to 247 MHz.

Two further amplifiers (T3, T1), which are interconnected via a three-circuit band-pass filter, boost and filter out the IF signal from B1.

5.2 Checking and Adjusting

5.2.1 Checking and Adjusting the Oscillator (C207, C208)

Remove BR7.
Connect a DC source of 3.5 to 15 V to MP7.1.
Connect a frequency counter to MP35.
Check the following nominal values:

Voltage at MP7.1	Frequency at MP35
3.5 ±0.1 V	195 ±0.3 MHz
15.0 ±0.1 V	202 ±0.3 MHz

and adjust C207 and C208 as necessary.

5.2.2 Adjusting the 63-MHz Circuit (L350)

Preparation as in 5.2.1.
Set oscillator to 198 ±0.3 MHz with the DC voltage.
Measure level at MP12 and adjust to a maximum with L350.

5.2.3 Adjusting the 47.8 to 54.8-MHz Band-pass Filter (L403, L404, L405, L503)

Remove BR40.
Connect a sweep tester to MP40.2 (signal input) and MP50.1 (high-impedance probe).
Screen filter sections with a cover with trimming holes.
Adjust to the following nominal values with L403, L404, L405 and L503.

Frequency (MHz)	Characteristic	Nominal value (dB)
47.8 to 54.8	gain	12 ±2
46.0 to 56.5	relative loss	< 6
42.6	relative loss	> 20
60	relative loss	> 40
72.2	relative loss	> 70

5.2.4 Adjusting the 240 to 247-MHz Band-pass Filter (C6, C8, C10)

Remove BR30.
Connect sweep tester to MP30.2 (signal input) and ST96 (50-Ω detector).
Screen the filter sections with the cover.
Adjust to the following nominal values with C6, C8, C10:

Frequency (MHz)	Characteristic	Nominal value (dB)	Comments
240 to 247	gain	< 10 to 21	dependent on R7
240 to 247	ripple	< 1	
255	relative loss	> 25	
225	relative loss	> 35	
195 to 202	relative loss	> 70	

5.2.5 Checking and Adjusting the Output Level (R7)

Connect a power meter to ST96.
Measure level and if necessary adjust to the nominal value of 4 ±1 dBm with R7.

5.2.6 Checking the Synchronization and Switching Time

Set the XPC/SMPC to sweep periodically:

start frequency = 680 MHz,
stop frequency = 699.9 MHz,
step size = 19900 kHz.

Display voltage at MP8 on an oscilloscope. It is to be a square-wave signal with an upper voltage of 15 V, a lower voltage of 3.5 V and a rise time of < 0.5 ms.

5.2.7 Checking and Adjusting the Supply Voltage B (R602)

Measure voltage at MP61.2 and if necessary adjust to 4.85 ±0.05 V with R602.

5.3 Troubleshooting

5.3.1 DC Nominal Values

MP1	0.4 to 2.4 V (dependent on R7)
MP2	1.65 ±0.3 V
MP3	0.8 ±0.2 V
MP4	1.4 ±0.2 V
MP5	2.5 ±0.3 V
MP9	1.5 ±0.2 V
MP11	2.1 ±0.3 V
MP12	0.8 ±0.2 V
MP13	2.0 ±0.2 V
MP14	0.8 ±0.2 V

	CW	FM
MP6.1	9.4 ±0.5 V	-5.6 ±0.5 V
MP6.2	-5.6 ±0.5 V	9.4 ±0.5 V

5.3.2 AC Nominal Values

Test Point	Level (dBm)	Frequency (MHz)
MP36	6 ±1	195 to 202
R316/B300.1	-24 ±2	135
Terminal 6 (K2)	-6 ±2	12.2 to 12.3
C401/L603	6 ±2	60 to 67
MP50	2 ±2	47.8 to 54.8
MP31	6 ±2	195 to 202
R40/B1.1	-9 ±1.5	45

5.4 Interfaces

5.4.1 Analog Interface

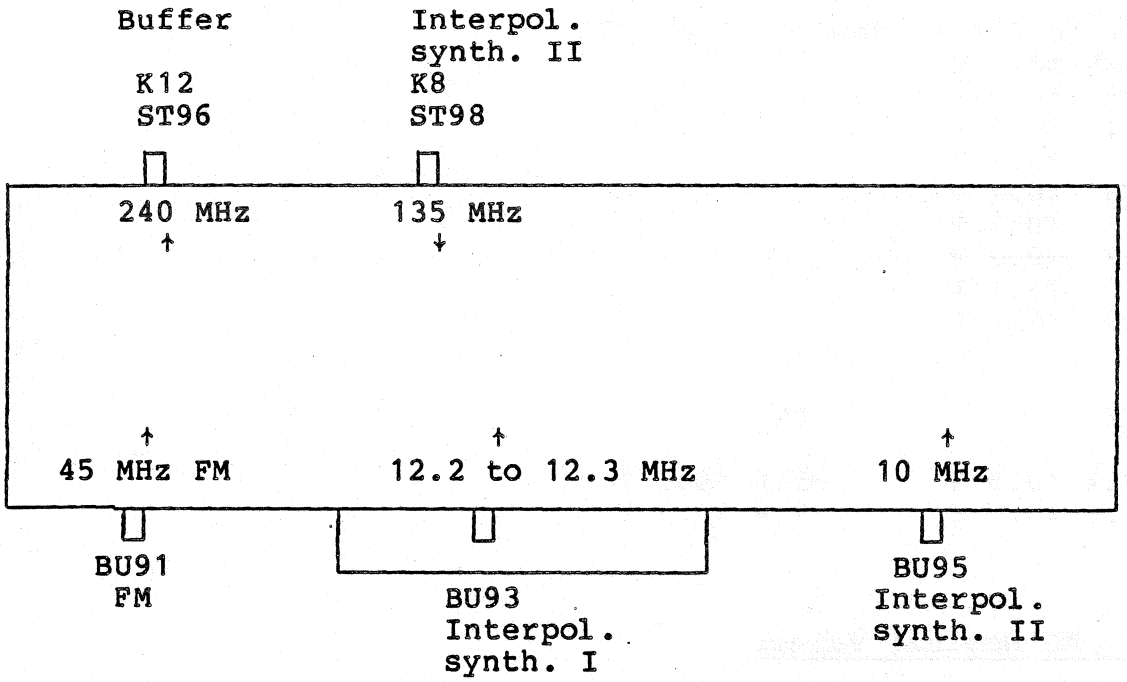

ST/BU	91	93	95
f	45 MHz	12.2 to 12.3 MHz	10 MHz
Level	2 ±1 dBm	-3 ±1 dBm	TTL
Z	≈ 80 Ω	50 Ω	560 Ω
Coupling	AC	DC	DC
Shape of curve	sinusoidal	sinusoidal	rect-angular

ST/BU	96	98
f	240 to 247 MHz	135 MHz
Level	4 ±1 dBm	0 ±1 dBm
Z	50 Ω	50 Ω
Coupling	DC	AC
Shape of curve	sinusoidal	sinusoidal

5.4.2 Digital Interface

The division factor d and the code for the FM switchover are transferred in two data words.

ST90		D7 22	D6 21	D5 20	D4 19	D3 18	D2 17	D1 16	DO 15
Strobe 1 ST90.2	1 0	X	off FM on	X	X	8 ⟶			1 LSB
Strobe 2 ST90.4	1 0	X	X	X	160 MSB	80 ⟵	40 d factor	20	10 ⟶

The d factor place value is specified by the numbers in the table, to which 320 must be added (hardwired).

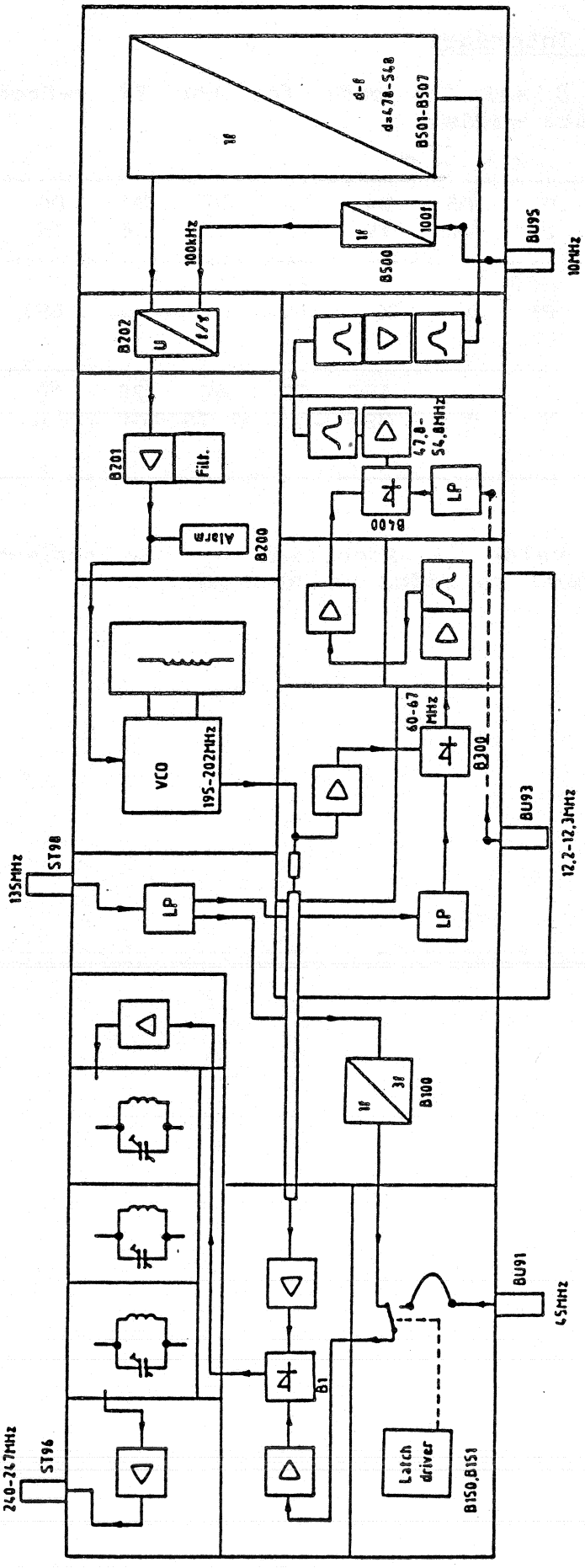

Fig. 5-2 Block diagram of the interpolation synthesizer III

ROHDE & SCHWARZ
MÜNCHEN

Schaltteillisten
Stromläufe
Bestückungspläne

Parts lists
Circuit diagrams
Components plans

R 29500 Bl. 2

Kennzeichen Component No.	Benennung/Beschreibung Designation	Sachnummer Stock No.	enthalten in contained in
B1	BM SRA1 MIXER 0.5GHZ MIXER MINI-CCTS SRA1	BM 207.3465	300.5192
B100	BL MC10231L 2XD FLIPFL FLIP FLOP MOTOROLA MC10231L	BL 300.6201	300.5192
B150	BL SN74LS175N 4/D-FLIPFLO IC FLIP FLOP SN74LS175N TEXAS SN74LS175N	291.5048	300.5192
B151	BO LM124J 4XL.P.OPAMP OPERATIONAL AMPLIFIER NSC LM124J	BO 300.6353	300.5192
B200	BO TCA965 FENSTER-DISKRIM DISCRIMINATOR SIEMENS TCA965	BO 279.2213	300.5192
B201	BO SE5534AFE LOW N.OPAMP OPERATIONAL AMPLIFIER SIGNETICS SE5534AFE	BO 301.3335	300.5192
B202	BL 11C44DC PHASE/FREQ.DET PHASE FREQU.DETECTOR FAIRCHILD 11C44PC	BL 300.9481	300.5192
B300	BM SRA1 MIXER 0.5GHZ MIXER MINI-CCTS SRA1	BM 207.3465	300.5192
B400	BM SRA1 MIXER 0.5GHZ MIXER MINI-CCTS SRA1	BM 207.3465	300.5192
B500	BL SN74LS390N 2XDEC.COUNT IC DECADE COUNTER SN74LS3 TEXAS SN74LS390N	300.6760	300.5192
B501	BL SN74LS174N 6/D-FLIPFL. IC FLIP-FLOP SN74LS174N TEXAS SN74LS174N	266.7970	300.5192
B502	BL SN74LS174N 6/D-FLIPFL. IC FLIP-FLOP SN74LS174N TEXAS SN74LS174N	266.7970	300.5192
B503	BL SN74LS191N ZAEHLER IC COUNTER TEXAS SN74LS191N	250.2721	300.5192
B504	BL SN74LS191N ZAEHLER IC COUNTER TEXAS SN74LS191N	250.2721	300.5192
B505	BL SN74LS191N ZAEHLER IC COUNTER TEXAS SN74LS191N	250.2721	300.5192
B506	BL SP8647BDG10:1DIVID UHF DIVIDER PLESSEY SP8647BDG	BL 300.6747	300.5192
B507	BL MC12014L CONTR.LOGIC CONTROL LOGIC MOTOROLA MC12014L	BL 300.6753	300.5192
BR7	FP KURZSCHLUSSBUCHSE SHORTING PLUG PK 452-70302	FP 491.7042	300.5192

Für diese Unterlage behalten wir uns alle Rechte vor

Kennzeichen Component No.	Benennung/Beschreibung Designation	Sachnummer Stock No.	enthalten in contained in
BR30	FP KURZSCHLUSSBUCHSE SHORTING PLUG PK 452-70302	FP 491.7042	300.5192
BR40	FP KURZSCHLUSSBUCHSE SHORTING PLUG PK 452-70302	FP 491.7042	300.5192
BU1	FP BUCHSE VERTIKAL P.V.1P SOCKET BERG 75377-001	FP 278.5577	300.5192
BIS/TO BU14			
BU91	FJ EINBAUBUCHSE SYST.SMS FIXED SOCKET RADIALL R.299 012	300.6876	
BU93	FJ EINBAUBUCHSE SYST.SMS FIXED SOCKET RADIALL R.299 012	300.6876	
BU95	FJ EINBAUBUCHSE SYST.SMS FIXED SOCKET RADIALL R.299 012	300.6876	
C1	CC 100PF+-2%4X5N750 CAPACITOR VALVO 2222 678 58101	CC 087.6906	300.5192
C2	CC 1NF+-10%63V K2000 CERAMIC CAPACITOR VALVO 2222 63051 102	CC 022.0784	300.5192
C3	CE 2,2UF+-20%20V 5X 4X 7 ELECTROLYTIC CAPACITOR ERO-TANTAL TA-ELKOETR-2,2/20	CE 022.8104	300.5192
C4	CC 3,9PF+-0,25PF3X4NPO CAPACITOR VALVO 2222 678 09398	CC 087.6370	300.5192
C5	CC 1NF+-10%63V K2000 CERAMIC CAPACITOR VALVO 2222 63051 102	CC 022.0784	300.5192
C6	CT 9,2PF TAUCHTR.RD 7X12 AIR-TYPE TRIMMER TEKELEC LUFTTRAT5201MMUTTER	CT 025.7373	300.5192
C7	MZ KONDENSATORPLATTE CAPACITOR PLATE	300.9130	300.5192
C8	CT 9,2PF TAUCHTR.RD 7X12 AIR-TYPE TRIMMER TEKELEC LUFTTRAT5201MMUTTER	CT 025.7373	300.5192
C9	MZ KONDENSATORPLATTE CAPACITOR PLATE	300.9130	300.5192
C10	CT 9,2PF TAUCHTR.RD 7X12 AIR-TYPE TRIMMER TEKELEC LUFTTRAT5201MMUTTER	CT 025.7373	300.5192
C11	CC 47PF+-2%4X5N150 CAPACITOR VALVO 2222 678 34479	CC 087.6670	300.5192
C12	CE 2,2UF+-20%20V 5X 4X 7 ELECTROLYTIC CAPACITOR ERO-TANTAL TA-ELKOETR-2,2/20	CE 022.8104	300.5192

Kennzeichen Component No.	Benennung/Beschreibung Designation	Sachnummer Stock No.	enthalten in contained in
C13	CC 1NF+-10%63V K2000 CERAMIC CAPACITOR VALVO 2222 63051 102	CC 022.0784	300.5192
C14	CC 1NF+-10%63V K2000 CERAMIC CAPACITOR VALVO 2222 63051 102	CC 022.0784	300.5192
C16	CC 5,6PF+-0,25PF3X4NP0 CAPACITOR VALVO 2222 678 09568	CC 087.6393	300.5192
C17	CC 1NF+-10%63V K2000 CERAMIC CAPACITOR VALVO 2222 63051 102	CC 022.0784	300.5192
C19	CC 1NF+-10%63V K2000 CERAMIC CAPACITOR VALVO 2222 63051 102	CC 022.0784	300.5192
C30	CE 2,2UF+-20%20V 5X 4X 7 ELECTROLYTIC CAPACITOR ERO-TANTAL TA-ELKOETR-2,2/20	CE 022.8104	300.5192
C31	CC 1NF+-10%63V K2000 CERAMIC CAPACITOR VALVO 2222 63051 102	CC 022.0784	300.5192
C32	CC 1NF+-10%63V K2000 CERAMIC CAPACITOR VALVO 2222 63051 102	CC 022.0784	300.5192
C33	CC 56PF+-2%5X6NP0 CAPACITOR VALVO 2222 678 10569	CC 087.6512	300.5192
C34	CC 120PF+-2%6X9NP0 CAPACITOR VALVO 2222 678 10121	CC 087.6558	300.5192
C35	CC 56PF+-2%5X6NP0 CAPACITOR VALVO 2222 678 10569	CC 087.6512	300.5192
C36	CE 2,2UF+-20%20V 5X 4X 7 ELECTROLYTIC CAPACITOR ERO-TANTAL TA-ELKOETR-2,2/20	CE 022.8104	300.5192
C37	CC 1NF+-10%63V K2000 CERAMIC CAPACITOR VALVO 2222 63051 102	CC 022.0784	300.5192
C38	CC 3,9PF+-0,25PF3X4NP0 CAPACITOR VALVO 2222 678 09398	CC 087.6370	300.5192
C39	CC 4,7NF+-10%6X9R2000 CAPACITOR VALVO 2222 63051 472	CC 087.7102	300.5192
C40	CC 1NF+-10%63V K2000 CERAMIC CAPACITOR VALVO 2222 63051 102	CC 022.0784	300.5192
C49	CC 1NF+-10%63V K2000 CERAMIC CAPACITOR VALVO 2222 63051 102	CC 022.0784	300.5192
C100	CC 15PF+-2%3X4NP0 CAPACITOR VALVO 2222 678 10159	CC 087.6441	300.5192
C101	CC 1NF+-10%63V K2000 CERAMIC CAPACITOR VALVO 2222 63051 102	CC 022.0784	300.5192

Für diese Unterlage behalten wir uns alle Rechte vor

Kennzeichen Component No.	Benennung/Beschreibung Designation	Sachnummer Stock No.	enthalten in contained in
C102	CC 33PF+-2%4X5NP0 CAPACITOR VALVO 2222 678 10339	CC 087.6487	300.5192
C103	CC 1NF+-10%63V K2000 CERAMIC CAPACITOR VALVO 2222 63051 102	CC 022.0784	300.5192
C104	CE 47UF-10+50% 40V 9X13 ELECTROLYTIC CAPACITOR ROEDERST EK 00 CB 247 G	CE 006.7142	300.5192
C105	CE 2,2UF+-20%20V 5X 4X 7 ELECTROLYTIC CAPACITOR ERO-TANTAL TA-ELKOETR-2,2/20	CE 022.8104	300.5192
C106	CC 1NF+-10%63V K2000 CERAMIC CAPACITOR VALVO 2222 63051 102	CC 022.0784	300.5192
C107	CC 1NF+-10%63V K2000 CERAMIC CAPACITOR VALVO 2222 63051 102	CC 022.0784	300.5192
C108	CC 56PF+-2%5X6NP0 CAPACITOR VALVO 2222 678 10569	CC 087.6512	300.5192
C109	CC 120PF+-2%6X9NP0 CAPACITOR VALVO 2222 678 10121	CC 087.6558	300.5192
C110	CC 56PF+-2%5X6NP0 CAPACITOR VALVO 2222 678 10569	CC 087.6512	300.5192
C111	CC 22PF+-2%4X5NP0 CAPACITOR VALVO 2222 678 10229	CC 087.6464	300.5192
C150	CE 2,2UF+-20%20V 5X 4X 7 ELECTROLYTIC CAPACITOR ERO-TANTAL TA-ELKOETR-2,2/20	CE 022.8104	300.5192
C151	CC 10NF-20+50%7X8R6000 CAPACITOR VALVO 2222 63051 64051103	CC 087.7525	300.5192
C152	CC 10NF-20+50%7X8R6000 CAPACITOR VALVO 2222 63051 64051103	CC 087.7525	300.5192
C153	CE 2,2UF+-20%20V 5X 4X 7 ELECTROLYTIC CAPACITOR ERO-TANTAL TA-ELKOETR-2,2/20	CE 022.8104	300.5192
C154	CE 2,2UF+-20%20V 5X 4X 7 ELECTROLYTIC CAPACITOR ERO-TANTAL TA-ELKOETR-2,2/20	CE 022.8104	300.5192
C155	CC 1NF+-10%63V K2000 CERAMIC CAPACITOR VALVO 2222 63051 102	CC 022.0784	300.5192
C156	CC 1NF+-10%63V K2000 CERAMIC CAPACITOR VALVO 2222 63051 102	CC 022.0784	300.5192
C157	CC 1NF+-10%63V K2000 CERAMIC CAPACITOR VALVO 2222 63051 102	CC 022.0784	300.5192
C158	CC 1NF+-10%63V K2000 CERAMIC CAPACITOR VALVO 2222 63051 102	CC 022.0784	300.5192

Kennzeichen Component No.	Benennung/Beschreibung Designation	Sachnummer Stock No.	enthalten in contained in
C159	CC 1NF+-10%63V K2000 CERAMIC CAPACITOR VALVO 2222 63051 102	CC 022.0784	300.5192
C160	CC 1NF+-10%63V K2000 CERAMIC CAPACITOR VALVO 2222 63051 102	CC 022.0784	300.5192
C200	CE 2,2UF+-20%20V 5X 4X 7 ELECTROLYTIC CAPACITOR ERO-TANTAL TA-ELKOETR-2,2/20	CE 022.8104	300.5192
C201	CC 1NF+-10%63V K2000 CERAMIC CAPACITOR VALVO 2222 63051 102	CC 022.0784	300.5192
C202	CC 1NF+-10%63V K2000 CERAMIC CAPACITOR VALVO 2222 63051 102	CC 022.0784	300.5192
C203	CC 1PF+-0,25PF3X4P100 CAPACITOR VALVO 2222 678 03108	CC 087.6170	300.5192
C204	CE 2,2UF+-20%20V 5X 4X 7 ELECTROLYTIC CAPACITOR ERO-TANTAL TA-ELKOETR-2,2/20	CE 022.8104	300.5192
C205	CC 33 PF+-5% 500VRD8 N750 CERAMIC CAPACITOR DRALORIC N750/33/5SP80/500V	022.0878	300.5192
C206	CC 22 PF+-2%N150/IA3ROHR CERAMIC CAPACITOR DRALORIC N150/IA22/2RD3X10LC	022.3725	300.5192
C207	CT 9,2PF TAUCHTR.RD 7X12 AIR-TYPE TRIMMER TEKELEC LUFTTRAT5201MMUTTER	CT 025.7373	300.5192
C208	CT 4PF N033 7S-13 TRIMMER	CT 087.7160	300.5192
C209	CC 1NF+-10%63V K2000 CERAMIC CAPACITOR VALVO 2222 63051 102	CC 022.0784	300.5192
C210	CC 1NF+-10%63V K2000 CERAMIC CAPACITOR VALVO 2222 63051 102	CC 022.0784	300.5192
C212	CC 3,3PF+-0,25PF3X4NP0 CAPACITOR VALVO 2222 678 09338	CC 087.6364	300.5192
C251	CK 430PF+-1,25%63V7,5QUAD CAPACITOR SIEMENS B33531-A5431-F	CK 213.4330	300.5192
C252	CK 1UF+-10%50V5RM MKT CAPACITOR WIMA MKS2/50/1UF/10%	CK 099.2998	300.5192
C253	CK 1UF+-10%50V5RM MKT CAPACITOR WIMA MKS2/50/1UF/10%	CK 099.2998	300.5192
C254	CK 15NF+-5%63V5RM MKT CAPACITOR WIMA MKS2/63/0,015UF/5%	CK 099.2875	300.5192
C255	CK 22NF+-5%63V5RM MKT CAPACITOR WIMA MKS2/63/0,022UF/5%	CK 099.2881	300.5192

Für diese Unterlage behalten wir uns alle Rechte vor

Kennzeichen Component No.	Benennung/Beschreibung Designation	Sachnummer Stock No.	enthalten in contained in
C256	CC 150PF+-2%5X6N750 CAPACITOR VALVO 2222 678 58151	CC 087.6929	300.5192
C257	CE 2,2UF+-20%20V 5X 4X 7 ELECTROLYTIC CAPACITOR ERO-TANTAL TA-ELKOETR-2,2/20	CE 022.8104	300.5192
C258	CE 2,2UF+-20%20V 5X 4X 7 ELECTROLYTIC CAPACITOR ERO-TANTAL TA-ELKOETR-2,2/20	CE 022.8104	300.5192
C259	CE 47UF-10+50% 40V 9X13 ELECTROLYTIC CAPACITOR ROEDERST EK 00 CB 247 G	CE 006.7142	300.5192
C260	CC 100NF+-10%50V5K1200VIE CAPACITOR UNION CARB CK05BX104K	CC 084.5350	300.5192
C261	CK 22NF+-5%63V5RM MKT CAPACITOR WIMA MKS2/63/0,022UF/5%	CK 099.2881	300.5192
C262	CK 22NF+-5%63V5RM MKT CAPACITOR WIMA MKS2/63/0,022UF/5%	CK 099.2881	300.5192
C300	CC 1NF+-10%63V K2000 CERAMIC CAPACITOR VALVO 2222 63051 102	CC 022.0784	300.5192
C301	CC 3,9PF+-0,25PF3X4NP0 CAPACITOR VALVO 2222 678 09398	CC 087.6370	300.5192
C302	CE 2,2UF+-20%20V 5X 4X 7 ELECTROLYTIC CAPACITOR ERO-TANTAL TA-ELKOETR-2,2/20	CE 022.8104	300.5192
C303	CC 1NF+-10%63V K2000 CERAMIC CAPACITOR VALVO 2222 63051 102	CC 022.0784	300.5192
C305	CC 1NF+-10%63V K2000 CERAMIC CAPACITOR VALVO 2222 63051 102	CC 022.0784	300.5192
C308	CC 27PF+-2%4X5NP0 CAPACITOR VALVO 2222 678 10279	CC 087.6470	300.5192
C309	CC 33PF+-2%4X5NP0 CAPACITOR VALVO 2222 678 10339	CC 087.6487	300.5192
C310	CC 15PF+-2%3X4NP0 CAPACITOR VALVO 2222 678 10159	CC 087.6441	300.5192
C349	CC 3,3PF+-0,25PF3X4NP0 CAPACITOR VALVO 2222 678 09338	CC 087.6364	300.5192
C350	CC 10NF-20+50%7X8R6000 CAPACITOR VALVO 2222 63051 64051103	CC 087.7525	300.5192
C351	CC 120PF+-2%6X9NP0 CAPACITOR VALVO 2222 678 10121	CC 087.6558	300.5192
C352	CC 1NF+-10%63V K2000 CERAMIC CAPACITOR VALVO 2222 63051 102	CC 022.0784	300.5192

Kennzeichen Component No.	Benennung/Beschreibung Designation	Sachnummer Stock No.	enthalten in contained in
C353	CC 1NF+-10%63V K2000 CERAMIC CAPACITOR VALVO 2222 63051 102	CC 022.0784	300.5192
C354	CC 1NF+-10%63V K2000 CERAMIC CAPACITOR VALVO 2222 63051 102	CC 022.0784	300.5192
C355	CC 1NF+-10%63V K2000 CERAMIC CAPACITOR VALVO 2222 63051 102	CC 022.0784	300.5192
C356	CC 3,9PF+-0,25PF3X4NP0 CAPACITOR VALVO 2222 678 09398	CC 087.6370	300.5192
C357	CC 47PF+-2%3X4N750 CAPACITOR VALVO 2222 678 58479	CC 087.6864	300.5192
C358	CC 100PF+-2%4X5N750 CAPACITOR VALVO 2222 678 58101	CC 087.6906	300.5192
C359	CC 100PF+-2%4X5N750 CAPACITOR VALVO 2222 678 58101	CC 087.6906	300.5192
C360	CC 47PF+-2%3X4N750 CAPACITOR VALVO 2222 678 58479	CC 087.6864	300.5192
C361	CC 6,8PF+-0,25PF3X4NP0 CAPACITOR VALVO 2222 678 09688	CC 087.6406	300.5192
C362	CC 220PF+-2%6X7N750 CAPACITOR VALVO 2222 678 58221	CC 087.6941	300.5192
C363	CC 330PF+-2%6X9N750 CERAMIC CAPACITOR VALVO 2222 678 58331	CC 087.6964	300.5192
C364	CC 1NF+-10%63V K2000 CERAMIC CAPACITOR VALVO 2222 63051 102	CC 022.0784	300.5192
C400	CE 2,2UF+-20%20V 5X 4X 7 ELECTROLYTIC CAPACITOR ERO-TANTAL TA-ELKOETR-2,2/20	CE 022.8104	300.5192
C401	CC 1NF+-10%63V K2000 CERAMIC CAPACITOR VALVO 2222 63051 102	CC 022.0784	300.5192
C402	CC 1NF+-10%63V K2000 CERAMIC CAPACITOR VALVO 2222 63051 102	CC 022.0784	300.5192
C403	CE 2,2UF+-20%20V 5X 4X 7 ELECTROLYTIC CAPACITOR ERO-TANTAL TA-ELKOETR-2,2/20	CE 022.8104	300.5192
C404	CC 1NF+-10%63V K2000 CERAMIC CAPACITOR VALVO 2222 63051 102	CC 022.0784	300.5192
C405	CC 1NF+-10%63V K2000 CERAMIC CAPACITOR VALVO 2222 63051 102	CC 022.0784	300.5192
C406	CC 1NF+-10%63V K2000 CERAMIC CAPACITOR VALVO 2222 63051 102	CC 022.0784	300.5192

Für diese Unterlage behalten wir uns alle Rechte vor

Kennzeichen Component No.	Benennung/Beschreibung Designation	Sachnummer Stock No.	enthalten in contained in
C407	CC 82PF+-2%6X7NP0 CAPACITOR VALVO 2222 678 10829	CC 087.6535	300.5192
C408	CC 1NF+-10%63V K2000 CERAMIC CAPACITOR VALVO 2222 63051 102	CC 022.0784	300.5192
C409	CC 1NF+-10%63V K2000 CERAMIC CAPACITOR VALVO 2222 63051 102	CC 022.0784	300.5192
C410	CC 82PF+-2%6X7NP0 CAPACITOR VALVO 2222 678 10829	CC 087.6535	300.5192
C411	CC 10NF-20+50%7X8R6000 CAPACITOR VALVO 2222 63051 64051103	CC 087.7525	300.5192
C412	CC 82PF+-2%6X7NP0 CAPACITOR VALVO 2222 678 10829	CC 087.6535	300.5192
C413	CC 1NF+-10%63V K2000 CERAMIC CAPACITOR VALVO 2222 63051 102	CC 022.0784	300.5192
C414	CC 1NF+-10%63V K2000 CERAMIC CAPACITOR VALVO 2222 63051 102	CC 022.0784	300.5192
C415	CC 12PF+-2%3X4NP0 CAPACITOR VALVO 2222 678 10129	CC 087.6435	300.5192
C416	CC 220PF+-2%6X7N750 CAPACITOR VALVO 2222 678 58221	CC 087.6941	300.5192
C417	CC 10PF+-0,25PF3X4NP0 CAPACITOR VALVO 2222 678 09109	CC 087.6429	300.5192
C418	CC 10NF-20+50%7X8R6000 CAPACITOR VALVO 2222 63051 64051103	CC 087.7525	300.5192
C419	CC 18PF+-2%3X4NP0 CAPACITOR VALVO 2222 678 10189	CC 087.6458	300.5192
C420	CC 33PF+-2%3X4N750 CAPACITOR VALVO 2222 678 58339	CC 087.6841	300.5192
C500	CC 100NF+-10%50V5K1200VIE CAPACITOR UNION CARB CK05BX104K	CC 084.5350	300.5192
C501	CE 47UF-10+50% 40V 9X13 ELECTROLYTIC CAPACITOR ROEDERST EK 00 CB 247 G	CE 006.7142	300.5192
C502	CC 10NF-20+50%7X8R6000 CAPACITOR VALVO 2222 63051 64051103	CC 087.7525	300.5192
C503	CC 10NF-20+50%7X8R6000 CAPACITOR VALVO 2222 63051 64051103	CC 087.7525	300.5192
C504	CC 10NF-20+50%7X8R6000 CAPACITOR VALVO 2222 63051 64051103	CC 087.7525	300.5192

Kennzeichen Component No.	Benennung/Beschreibung Designation	Sachnummer Stock No.	enthalten in contained in
C505	CC 10NF-20+50%7X8R6000 CAPACITOR VALVO 2222 63051 64051103	CC 087.7525	300.5192
C506	CC 10NF-20+50%7X8R6000 CAPACITOR VALVO 2222 63051 64051103	CC 087.7525	300.5192
C507	CC 10NF-20+50%7X8R6000 CAPACITOR VALVO 2222 63051 64051103	CC 087.7525	300.5192
C508	CC 10NF-20+50%7X8R6000 CAPACITOR VALVO 2222 63051 64051103	CC 087.7525	300.5192
C510	CC 82PF+-2%6X7NP0 CAPACITOR VALVO 2222 678 10829	CC 087.6535	300.5192
C511	CC 12PF+-2%3X4NP0 CAPACITOR VALVO 2222 678 10129	CC 087.6435	300.5192
C600	CE 47UF-10+50% 40V 9X13 ELECTROLYTIC CAPACITOR ROEDERST EK 00 CB 247 G	CE 006.7142	300.5192
C601	CE 47UF-10+50% 40V 9X13 ELECTROLYTIC CAPACITOR ROEDERST EK 00 CB 247 G	CE 006.7142	300.5192
C602	CE 47UF-10+50% 40V 9X13 ELECTROLYTIC CAPACITOR ROEDERST EK 00 CB 247 G	CE 006.7142	300.5192
C603	CE 22UF-10+50% 63V 9X13 ELECTROLYTIC CAPACITOR ROEDERST EK 00 CB 222 J	CE 006.7120	300.5192
C604	CE 100UF-10+50% 16V 9X13 ELECTROLYTIC CAPACITOR ROEDERST EK 00CB 310 D	CE 006.7165	300.5192
C605	CC 1NF+-10%63V K2000 CERAMIC CAPACITOR VALVO 2222 63051 102	CC 022.0784	300.5192
D1	LD 35DB/200M-10GHZ PI-FIL CHOKE ERIE 1214-038	LD 300.6818	300.5211
BIS/TO D14			
GL100	AD 1N4448 75V 0,15A UDI DIODE VALVO 1N4448	AD 012.0700	300.5192
GL150	AE BA379 25V PINDI DIODE BA379 SIEMENS BA379	244.7031	300.5192
BIS/TO GL155			
GL200	AE BB909B 25/ 3PF CDI TUNING DIODE VALVO BB909B	AE 092.9600	300.5192
GL250	AE 5082-2800 SCHOTTKYDI DIODE HEWLETT-P. 5082-2800	AE 012.9066	300.5192

Für diese Unterlage behalten wir uns alle Rechte vor

Kennzeichen Component No.	Benennung/Beschreibung Designation	Sachnummer Stock No.	enthalten in contained in
GL251	AE 5082-2800 SCHOTTKYDI DIODE HEWLETT-P. 5082-2800	AE 012.9066	300.5192
GL252	AE 5082-2800 SCHOTTKYDI DIODE HEWLETT-P. 5082-2800	AE 012.9066	300.5192
GL253	AE 5082-2800 SCHOTTKYDI DIODE HEWLETT-P. 5082-2800	AE 012.9066	300.5192
GL257	AD 1N4448 75V 0,15A UDI DIODE VALVO 1N4448	AD 012.0700	300.5192
GL500	AD 1N4448 75V 0,15A UDI DIODE VALVO 1N4448	AD 012.0700	300.5192
K1	DX LEITUNG CABLE	300.8033	300.5192
K2	DX LEITUNG CABLE	300.8033	300.5192
L1	LD 0,18UH10%0,120HM1,120A CHOKE DELEVAN DROSSEL1025-02	LD 067.2770	300.5192
L2	LD 0,22UH10%0,140HM1,045A CHOKE DELEVAN DROSSEL1025-04	LD 067.2786	300.5192
L3	SPULE COIL	300.9469	300.5192
L4	SPULE COIL	300.9469	300.5192
L5	SPULE COIL	300.9469	300.5192
L7	LD 10,0UH10%3,300HM0,144A CHOKE DELEVAN DROSSEL1025-44	LD 026.4184	300.5192
L19	LD 10,0UH10%3,300HM0,144A CHOKE DELEVAN DROSSEL1025-44	LD 026.4184	300.5192
L20	LD 10,0UH10%3,300HM0,144A CHOKE DELEVAN DROSSEL1025-44	LD 026.4184	300.5192
L31	LD 0,27UH10%0,160HM0,975A CHOKE DELEVAN DROSSEL1025-06	LD 067.2792	300.5192
L32	LD 0,27UH10%0,160HM0,975A CHOKE DELEVAN DROSSEL1025-06	LD 067.2792	300.5192
L34	LD 0,10UH10%0,080HM1,400A CHOKE DELEVAN DROSSEL1025-94	LD 067.2740	300.5192
L46	LD 10,0UH10%3,300HM0,144A CHOKE DELEVAN DROSSEL1025-44	LD 026.4184	300.5192
L49	LD 10,0UH10%3,300HM0,144A CHOKE DELEVAN DROSSEL1025-44	LD 026.4184	300.5192

Kennzeichen Component No.	Benennung/Beschreibung Designation	Sachnummer Stock No.	enthalten in contained in
L101	LD 0,12UH10%0,090HM1,300A CHOKE DELEVAN DROSSEL1025-96	LD 067.2757	300.5192
L102	LD 4,70UH10%1,200HM0,239A CHOKE DELEVAN DROSSEL1025-36	LD 067.2940	300.5192
L103	LD 150 UH10%15,00HM0,061A CHOKE DELEVAN DROSSEL1025-72	LD 067.3124	300.5192
L104	LD 0,27UH10%0,160HM0,975A CHOKE DELEVAN DROSSEL1025-06	LD 067.2792	300.5192
L105	LD 0,27UH10%0,160HM0,975A CHOKE DELEVAN DROSSEL1025-06	LD 067.2792	300.5192
L107	LD 0,12UH10%0,090HM1,300A CHOKE DELEVAN DROSSEL1025-96	LD 067.2757	300.5192
L108	LD 0,10UH10%0,080HM1,400A CHOKE DELEVAN DROSSEL1025-94	LD 067.2740	300.5192
L109	LD 0,12UH10%0,090HM1,300A CHOKE DELEVAN DROSSEL1025-96	LD 067.2757	300.5192
L110	LD 10,0UH10%3,300HM0,144A CHOKE DELEVAN DROSSEL1025-44	LD 026.4184	300.5192
L150	LD 150 UH10%15,00HM0,061A CHOKE DELEVAN DROSSEL1025-72	LD 067.3124	300.5192
L151	LD 1000UH10%72,00HM0,028A CHOKE DELEVAN DROSSEL1025-92	LD 037.8005	300.5192
L152	LD 1000UH10%72,00HM0,028A CHOKE DELEVAN DROSSEL1025-92	LD 037.8005	300.5192
L200	LD 1,00UH10%1,000HM0,390A CHOKE DELEVAN 1025-20	LD 067.2863	300.5192
L201	LD 0,15UH10%0,100HM1,230A CHOKE DELEVAN DROSSEL1025-00	LD 067.2763	300.5192
L202	LD 1,00UH10%1,000HM0,390A CHOKE DELEVAN 1025-20	LD 067.2863	300.5192
L203	LD 3,30UH10%0,850HM0,285A CHOKE DELEVAN DROSSEL1025-32	LD 067.2928	300.5192
L204	LD SPULE 70NH COIL	300.6624	300.5192
L205	LD 1,00UH10%1,000HM0,390A CHOKE DELEVAN 1025-20	LD 067.2863	300.5192
L206	LD 1,00UH10%1,000HM0,390A CHOKE DELEVAN 1025-20	LD 067.2863	300.5192

Für diese Unterlage behalten wir uns alle Rechte vor

Kennzeichen Component No.	Benennung/Beschreibung Designation	Sachnummer Stock No.	enthalten in contained in
L250	LD 33,0UH10%3,400HM0,130A CHOKE DELEVAN DROSSEL 1025-56	LD 067.3047	300.5192
L251	LD SPULE COIL	303.1475	300.5192
L252	LD 2,2MIH 10%99MIA33,80HM CHOKE NYTRONIC HF-DROSSEL SWD-2200	073.1759	300.5192
L254	LD 47,0UH10%4,500HM0,110A CHOKE DELEVAN DROSSEL1025-60	LD 067.3060	300.5192
L300	LD 0,10UH10%0,080HM1,400A CHOKE DELEVAN DROSSEL1025-94	LD 067.2740	300.5192
L303	LD 0,10UH10%0,080HM1,400A CHOKE DELEVAN DROSSEL1025-94	LD 067.2740	300.5192
L304	LD 0,12UH10%0,090HM1,300A CHOKE DELEVAN DROSSEL1025-96	LD 067.2757	300.5192
L350	LD 53NH/47PF Q100 M.KERN CHOKE COMPONEX E521HN-020023	300.6653	300.5192
L401	LD 0,047 UH 10% CHOKE INDUSTRIA BAUREIHE1025,0,047	249.5995	300.5192
L402	LD 0,82UH 5%0,850HM0,420A HIGH FREQUENCY CHOKE DELEVAN 1025-18 +-5%	355.9890	300.5192
L403	LD 115NH/22PF Q100 M.KERN CHOKE COMPONEX E521HN-040023	300.6601	300.5192
L404	LD 0,16UH/47PF Q100/59MHZ COIL+CORE TOKO E521LS050033	300.9769	300.5192
L405	LD 115NH/22PF Q100 M.KERN CHOKE COMPONEX E521HN-040023	300.6601	300.5192
L406	LD 4,70UH10%1,200HM0,239A CHOKE DELEVAN DROSSEL1025-36	LD 067.2940	300.5192
L407	LD 0,82UH 5%0,850HM0,420A HIGH FREQUENCY CHOKE DELEVAN 1025-18 +-5%	355.9890	300.5192
L500	LD 15,0UH10%2,800HM0,157A CHOKE DELEVAN DROSSEL1025-48	LD 067.3001	300.5192
L501	LD 22,0UH10%3,300HM0,114A CHOKE DELEVAN DROSSEL1025-52	LD 067.3024	300.5192
L502	LD 1,00UH10%1,CC0HM0,390A CHOKE DELEVAN 1025-20	LD 067.2863	300.5192
L503	LD 115NH/22PF Q100 M.KERN CHOKE COMPONEX E521HN-040023	300.6601	300.5192

Kennzeichen Component No.	Benennung/Beschreibung Designation	Sachnummer Stock No.	enthalten in contained in
L601	LD 0,56UH10%0,500HM0,550A CHOKE DELEVAN DROSSEL1025-14	LD 067.2834	300.5192
L603	LD 0,18UH10%0,120HM1,120A CHOKE DELEVAN DROSSEL1025-02	LD 067.2770	300.5192
L604	LD 0,18UH10%0,120HM1,120A CHOKE DELEVAN DROSSEL1025-02	LD 067.2770	300.5192
L605	LD 0,18UH10%0,120HM1,120A CHOKE DELEVAN DROSSEL1025-02	LD 067.2770	300.5192
L607	LD 0,39UH10%0,300HM0,710A CHOKE DELEVAN DROSSEL1025-10	LD 067.2811	300.5192
L608	LD 0,39UH10%0,300HM0,710A CHOKE DELEVAN DROSSEL1025-10	LD 067.2811	300.5192
L609	LD 0,82UH10%0,850HM0,420A CHOKE DELEVAN DROSSEL1025-18	LD 067.2857	300.5192
L610	LD 1,00UH10%1,000HM0,390A CHOKE DELEVAN 1025-20	LD 067.2863	300.5192
L611	LD 0,82UH10%0,850HM0,420A CHOKE DELEVAN DROSSEL1025-18	LD 067.2857	300.5192
L613	LD 0,82UH10%0,850HM0,420A CHOKE DELEVAN DROSSEL1025-18	LD 067.2857	300.5192
L614	LD 0,82UH10%0,850HM0,420A CHOKE DELEVAN DROSSEL1025-18	LD 067.2857	300.5192
L615	LD 0,82UH 5%0,850HM0,420A HIGH FREQUENCY CHOKE DELEVAN 1025-18 +-5%	355.9890	300.5192
L616	LD 0,47 UH +-5%/,8A0,30HM CHOKE INDUSTRIA DROSSEL1025-12+5%	067.3230	300.5192
MP1	VL WIRE-WRAP PIN BERG NR. 75 403-001	VL 088.4507	300.5192
BIS/TO MP5			
MP6	FP INDIREKT.STECKERL.36P. PIN CONNECTOR BERG 75160-102-36	FP 242.3600	300.5192
MP7	FP INDIREKT.STECKERL.36P. PIN CONNECTOR BERG 75160-102-36	FP 242.3600	300.5192
MP8	VL WIRE-WRAP PIN BERG NR. 75 403-001	VL 088.4507	300.5192
MP9	VL WIRE-WRAP PIN BERG NR. 75 403-001	VL 088.4507	300.5192
MP11	VL WIRE-WRAP PIN BERG NR. 75 403-001	VL 088.4507	300.5192

Für diese Unterlage behalten wir uns alle Rechte vor

Kennzeichen Component No.	Benennung/Beschreibung Designation	Sachnummer Stock No.	enthalten in contained in
MP12	VL WIRE-WRAP PIN BERG NR. 75 403-001	VL 088.4507	300.5192
MP13	VL WIRE-WRAP PIN BERG NR. 75 403-001	VL 088.4507	300.5192
MP14	VL WIRE-WRAP PIN BERG NR. 75 403-001	VL 088.4507	300.5192
MP15	VL WIRE-WRAP PIN BERG NR. 75 403-001	VL 088.4507	300.5192
MP17	FP INDIREKT.STECKERL.36P. PIN CONNECTOR BERG 75160-102-36	FP 242.3600	300.5192
MP30	FP INDIREKT.STECKERL.36P. PIN CONNECTOR BERG 75160-102-36	FP 242.3600	300.5192
MP31	VL WIRE-WRAP PIN BERG NR. 75 403-001	VL 088.4507	300.5192
MP35	FP INDIREKT.STECKERL.36P. PIN CONNECTOR BERG 75160-102-36	FP 242.3600	300.5192
MP36	VL WIRE-WRAP PIN BERG NR. 75 403-001	VL 088.4507	300.5192
MP40	FP INDIREKT.STECKERL.36P. PIN CONNECTOR BERG 75160-102-36	FP 242.3600	300.5192
MP50	FP INDIREKT.STECKERL.36P. PIN CONNECTOR BERG 75160-102-36	FP 242.3600	300.5192
MP60	VL WIRE-WRAP PIN BERG NR. 75 403-001	VL 088.4507	300.5192
MP61	FP INDIREKT.STECKERL.36P. PIN CONNECTOR BERG 75160-102-36	FP 242.3600	300.5192
R1	RL 0,35W 2,00KOHM+-1%TK50 RESISTOR DRALORIC SMA0207/2,00K-F-D	RL 083.0826	300.5192
R2	RL 0,21W 10 OHM2% UNGEW. RESISTOR RESISTA MK1 100HM 2% UNGEW.	RL 092.5833	300.5192
R3	RL 0,35W 274 OHM+-1%TK50 RESISTOR DRALORIC SMA0207/2740HM-F-D	RL 083.0178	300.5192
R4	RL 0,35W 332 KOHM+-1%TK50 RESISTOR DRALORIC SMA0207/332K-F-C	RL 083.2441	300.5192
R5	RL 0,35W 82,5KOHM+-1%TK50 RESISTOR DRALORIC SMA0207/82,5K-F-C	RL 082.2302	300.5192
R6	RL 0,35W 27,4KOHM+-1%TK50 RESISTOR DRALORIC SMA 0207/27,4K-F-C	RL 082.2583	300.5192
R7	RS 0,5W50KOHM+-10%10X10X5 CERMET POTENTIOMETER T BOURNS 3386-1-503	RS 087.7677	300.5192
R10	RL 0,21W 3,92KOHM+-1%TK50 RESISTOR RESISTA MK1 3K92 1% TK50	RL 092.1515	300.5192

Kennzeichen Component No.	Benennung/Beschreibung Designation	Sachnummer Stock No.	enthalten in contained in
R11	RL 0,21W 120 OHM2% UNGEW. RESISTOR RESISTA MK1 1200HM 2% UNGEW.	RL 092.5962	300.5192
R12	RL 0,21W 10 OHM2% UNGEW. RESISTOR RESISTA MK1 100HM 2% UNGEW.	RL 092.5833	300.5192
R30	RL 0,21W 1,82KOHM+-1%TK50 RESISTOR RESISTA MK1 1K82 1% TK50	RL 092.1473	300.5192
R31	RL 0,21W 10 OHM2% UNGEW. RESISTOR RESISTA MK1 100HM 2% UNGEW.	RL 092.5833	300.5192
R32	RL 0,21W 56 OHM2% UNGEW. RESISTOR RESISTA MK1 560HM 2% UNGEW.	RL 092.5927	300.5192
R33	RL 0,21W 10 OHM2% UNGEW. RESISTOR RESISTA MK1 100HM 2% UNGEW.	RL 092.5833	300.5192
R34	RL 0,21W 390 OHM2% UNGEW. RESISTOR RESISTA MK1 3900HM 2% UNGEW.	RL 092.6023	300.5192
R35	RL 0,21W 220 OHM2% UNGEW. RESISTOR RESISTA MK1 2200HM 2% UNGEW.	RL 092.5991	300.5192
R36	RL 0,21W 27 OHM2% UNGEW. RESISTOR RESISTA MK1 270HM 2% UNGEW.	RL 092.5885	300.5192
R37	RL 0,21W 47,5 OHM+-1%TK50 RESISTOR RESISTA MK1 47,50HM 1% TK50	RL 092.1267	300.5192
R38	RL 0,21W 15 OHM2% UNGEW. RESISTOR RESISTA MK1 150HM 2% UNGEW.	RL 092.5856	300.5192
R39	RL 0,21W 82 OHM2% UNGEW. RESISTOR RESISTA MK1 820HM 2% UNGEW.	RL 092.5940	300.5192
R40	RL 0,21W 15 OHM2% UNGEW. RESISTOR RESISTA MK1 150HM 2% UNGEW.	RL 092.5856	300.5192
R41	RL 0,21W 220 OHM2% UNGEW. RESISTOR RESISTA MK1 2200HM 2% UNGEW.	RL 092.5991	300.5192
R42	RL 0,21W 22 OHM2% UNGEW. RESISTOR RESISTA MK1 220HM 2% UNGEW.	RL 092.5879	300.5192
R43	RL 0,21W 220 OHM2% UNGEW. RESISTOR RESISTA MK1 2200HM 2% UNGEW.	RL 092.5991	300.5192
R44	RL 0,21W 100 OHM2% UNGEW. RESISTOR RESISTA MK1 1000HM 2% UNGEW.	RL 092.5956	300.5192
R45	RL 0,21W 18 OHM2% UNGEW. RESISTOR RESISTA MK1 180HM 2% UNGEW.	RL 092.5862	300.5192
R106	RL 0,35W 1,82KOHM+-1%TK50 RESISTOR DRALORIC SMA0207/1,82K-F-C	RL 082.2277	300.5192

Für diese Unterlage behalten wir uns alle Rechte vor

Kennzeichen Component No.	Benennung/Beschreibung Designation	Sachnummer Stock No.	enthalten in contained in
R107	RL 0,21W 274 OHM+-1%TK50 RESISTOR RESISTA MK1 2740HM 1% TK50	RL 092.1373	300.5192
R108	RL 0,21W 825 OHM+-1%TK50 RESISTOR RESISTA MK1 8250HM 1% TK50	RL 092.1438	300.5192
R109	RL 0,21W 562 OHM+-1%TK50 RESISTOR RESISTA MK1 5620HM 1% TK50	RL 092.1415	300.5192
R110	RL 0,21W 562 OHM+-1%TK50 RESISTOR RESISTA MK1 5620HM 1% TK50	RL 092.1415	300.5192
R111	RL 0,21W 562 OHM+-1%TK50 RESISTOR RESISTA MK1 5620HM 1% TK50	RL 092.1415	300.5192
R112	RL 0,21W 562 OHM+-1%TK50 RESISTOR RESISTA MK1 5620HM 1% TK50	RL 092.1415	300.5192
R113	RL 0,21W 33,2 OHM+-1%TK50 RESISTOR RESISTA MK1 33,20HM 1% TK50	RL 092.1244	300.5192
R114	RL 0,21W 22 OHM2% UNGEW. RESISTOR RESISTA MK1 220HM 2% UNGEW.	RL 092.5879	300.5192
R115	RL 0,21W 56 OHM2% UNGEW. RESISTOR RESISTA MK1 560HM 2% UNGEW.	RL 092.5927	300.5192
R116	RL 0,21W 56 OHM2% UNGEW. RESISTOR RESISTA MK1 560HM 2% UNGEW.	RL 092.5927	300.5192
R150	RL 0,21W 1,50KOHM+-1%TK50 RESISTOR RESISTA MK1 1K5 1% TK50	RL 092.1467	300.5192
R151	RL 0,21W 12,1KOHM+-1%TK50 RESISTOR RESISTA MK1 12K1 1% TK50	RL 092.1573	300.5192
R152	RL 0,21W 2,21KOHM+-1%TK50 RESISTOR RESISTA MK1 2K21 1% TK50	RL 092.1480	300.5192
R153	RL 0,21W 392 OHM+-1%TK50 RESISTOR RESISTA MK1 3920HM 1% TK50	RL 092.1396	300.5192
R154	RL 0,21W 392 OHM+-1%TK50 RESISTOR RESISTA MK1 3920HM 1% TK50	RL 092.1396	300.5192
R155	RL 0,21W 392 OHM+-1%TK50 RESISTOR RESISTA MK1 3920HM 1% TK50	RL 092.1396	300.5192
R156	RL 0,21W 392 OHM+-1%TK50 RESISTOR RESISTA MK1 3920HM 1% TK50	RL 092.1396	300.5192
R157	RL 0,21W 392 OHM+-1%TK50 RESISTOR RESISTA MK1 3920HM 1% TK50	RL 092.1396	300.5192
R158	RL 0,21W 2,21KOHM+-1%TK50 RESISTOR RESISTA MK1 2K21 1% TK50	RL 092.1480	300.5192

Kennzeichen Component No.	Benennung/Beschreibung Designation	Sachnummer Stock No.	enthalten in contained in
R159	RL 0,21W 392 OHM+-1%TK50 RESISTOR RESISTA MK1 392OHM 1% TK50	RL 092.1396	300.5192
R160	RL 0,21W 2,21KOHM+-1%TK50 RESISTOR RESISTA MK1 2K21 1% TK50	RL 092.1480	300.5192
R161	RL 0,21W 392 OHM+-1%TK50 RESISTOR RESISTA MK1 392OHM 1% TK50	RL 092.1396	300.5192
R162	RL 0,21W 2,21KOHM+-1%TK50 RESISTOR RESISTA MK1 2K21 1% TK50	RL 092.1480	300.5192
R163	RL 0,21W 392 OHM+-1%TK50 RESISTOR RESISTA MK1 392OHM 1% TK50	RL 092.1396	300.5192
R164	RL 0,21W 100 OHM2% UNGEW. RESISTOR RESISTA MK1 100OHM 2% UNGEW.	RL 092.5956	300.5192
R200	RL 0,35W 182 KOHM+-1%TK50 RESISTOR DRALORIC SMA0207/182K-F-C	RL 083.2193	300.5192
R201	RL 0,21W 121 KOHM+-1%TK50 RESISTOR RESISTA MK1 121K 1% TK50	RL 092.1696	300.5192
R202	RL 0,21W 82,5KOHM+-1%TK50 RESISTOR RESISTA MK1 82K5 1% TK50	RL 092.1673	300.5192
R203	RL 0,35W 182 OHM+-1%TK50 RESISTOR DRALORIC SMA0207/182OHM-F-D	RL 083.0010	300.5192
R204	RL 0,21W 562 OHM+-1%TK50 RESISTOR RESISTA MK1 562OHM 1% TK50	RL 092.1415	300.5192
R205	RL 0,35W 392 OHM+-1%TK50 RESISTOR DRALORIC SMA0207/392K-F-C	RL 082.2183	300.5192
R250	RL 0,35W 4,87KOHM+-1%TK50 RESISTOR DRALORIC SMA0207/4,87K-F-D	RL 083.1100	300.5192
R251	RL 0,21W 750 OHM+-1%TK50 RESISTOR RESISTA MK1	092.0231	300.5192
R252	RL 0,21W 3,92KOHM+-1%TK50 RESISTOR RESISTA MK1 3K92 1% TK50	RL 092.1515	300.5192
R253	RL 0,35W 10,0KOHM+-1%TK50 RESISTOR DRALORIC SMA0207/10K-F-D	RL 083.1297	300.5192
R255	RL 0,35W 82,5KOHM+-1%TK50 RESISTOR DRALORIC SMA0207/82,5K-F-C	RL 082.2302	300.5192
R256	RL 0,35W 27,4KOHM+-1%TK50 RESISTOR DRALORIC SMA 0207/27,4K-F-C	RL 082.2583	300.5192
R257	RL 0,35W 332 OHM+-1%TK50 RESISTOR DRALORIC SMA0207/332OHM-F-D	RL 083.0255	300.5192

Für diese Unterlage behalten wir uns alle Rechte vor

Kennzeichen Component No.	Benennung/Beschreibung Designation	Sachnummer Stock No.	enthalten in contained in
R258	RL 0,35W 15,0KOHM+-1%TK50 RESISTOR DRALORIC SMA0207/15K-F-D	RL 083.1400	300.5192
R259	RL 0,35W 27,4KOHM+-1%TK50 RESISTOR DRALORIC SMA 0207/27,4K-F-C	RL 082.2583	300.5192
R260	RL 0,35W 2,21KOHM+-1%TK50 RESISTOR DRALORIC SMA 0207/2,21K-F-C	RL 082.2477	300.5192
R261	RL 0,35W 221 OHM+-1%TK50 RESISTOR DRALORIC SMA0207/2210HM-F-D	RL 083.0084	300.5192
R262	RL 0,35W 562 KOHM+-1%TK50 RESISTOR DRALORIC SMA0207/562K-F-C	RL 083.2664	300.5192
R263	RL 0,21W 562 OHM+-1%TK50 RESISTOR RESISTA MK1 5620HM 1% TK50	RL 092.1415	300.5192
R264	RL 0,21W 1,82KOHM+-1%TK50 RESISTOR RESISTA MK1 1K82 1% TK50	RL 092.1473	300.5192
R265	RL 0,35W 2,74KOHM+-1%TK50 RESISTOR DRALORIC SMA0207/2,74K-F-D	RL 083.0926	300.5192
R266	RL 0,35W22,10 OHM+-1%TK50 RESISTOR DRALORIC SMA0207/22,10HM-F-D	RL 082.9188	300.5192
R267	RL 0,35W 200 OHM+-1%TK50 RESISTOR DRALORIC SMA0207/2000HM-F-D	RL 083.0049	300.5192
R300	RL 0,21W 18 OHM2% UNGEW. RESISTOR RESISTA MK1 180HM 2% UNGEW.	RL 092.5862	300.5192
R301	RL 0,21W 100 OHM2% UNGEW. RESISTOR RESISTA MK1 1000HM 2% UNGEW.	RL 092.5956	300.5192
R302	RL 0,35W 56,2 OHM+-1%TK50 RESISTOR DRALORIC SMA0207/56,20HM-F-D	RL 082.9571	300.5192
R303	RL 0,21W 220 OHM2% UNGEW. RESISTOR RESISTA MK1 2200HM 2% UNGEW.	RL 092.5991	300.5192
R304	RL 0,21W 22 OHM2% UNGEW. RESISTOR RESISTA MK1 220HM 2% UNGEW.	RL 092.5879	300.5192
R305	RL 0,21W 220 OHM2% UNGEW. RESISTOR RESISTA MK1 2200HM 2% UNGEW.	RL 092.5991	300.5192
R315	RL 0,21W 39 OHM2% UNGEW. RESISTOR RESISTA MK1 390HM 2% UNGEW.	RL 092.5904	300.5192
R316	RL 0,21W 39 OHM2% UNGEW. RESISTOR RESISTA MK1 390HM 2% UNGEW.	RL 092.5904	300.5192
R317	RL 0,21W 10 OHM2% UNGEW. RESISTOR RESISTA MK1 100HM 2% UNGEW.	RL 092.5833	300.5192

Kennzeichen Component No.	Benennung/Beschreibung Designation	Sachnummer Stock No.	enthalten in contained in
R318	RL 0,21W 10 OHM2% UNGEW. RESISTOR RESISTA MK1 100HM 2% UNGEW.	RL 092.5833	300.5192
R319	RL 0,21W 39 OHM2% UNGEW. RESISTOR RESISTA MK1 390HM 2% UNGEW.	RL 092.5904	300.5192
R350	RL 0,21W 182 KOHM+-1%TK50 RESISTOR DRALORIC SMA0204 182KOHM 1%	RL 092.0525	300.5192
R351	RL 0,21W 121 KOHM+-1%TK50 RESISTOR RESISTA MK1 121K 1% TK50	RL 092.1696	300.5192
R352	RL 0,21W 82,5KOHM+-1%TK50 RESISTOR RESISTA MK1 82K5 1% TK50	RL 092.1673	300.5192
R353	RL 0,21W 10 OHM2% UNGEW. RESISTOR RESISTA MK1 100HM 2% UNGEW.	RL 092.5833	300.5192
R354	RL 0,21W 274 OHM+-1%TK50 RESISTOR RESISTA MK1 2740HM 1% TK50	RL 092.1373	300.5192
R400	RL 0,21W 1,82KOHM+-1%TK50 RESISTOR RESISTA MK1 1K82 1% TK50	RL 092.1473	300.5192
R401	RL 0,21W 10 OHM2% UNGEW. RESISTOR RESISTA MK1 100HM 2% UNGEW.	RL 092.5833	300.5192
R402	RL 0,21W 100 OHM2% UNGEW. RESISTOR RESISTA MK1 1000HM 2% UNGEW.	RL 092.5956	300.5192
R403	RL 0,21W 330 OHM2% UNGEW. RESISTOR RESISTA MK1 3300HM 2% UNGEW.	RL 092.6017	300.5192
R404	RL 0,21W 82,5 OHM+-1%TK50 RESISTOR RESISTA MK1 82,50HM 1% TK50	RL 092.1315	300.5192
R405	RL 0,21W 39,2 OHM+-1%TK50 RESISTOR RESISTA MK1 39,20HM 1% TK50	RL 092.1250	300.5192
R407	RL 0,21W 182 KOHM+-1%TK50 RESISTOR DRALORIC SMA0204 182KOHM 1%	RL 092.0525	300.5192
R408	RL 0,21W 330 OHM2% UNGEW. RESISTOR RESISTA MK1 3300HM 2% UNGEW.	RL 092.6017	300.5192
R409	RL 0,35W 121KOHM+-1%TK50 RESISTOR DRALORIC SMA/207/121K-F-C	RL 083.2070	300.5192
R410	RL 0,21W 47 OHM2% UNGEW. RESISTOR RESISTA MK1 470HM 2% UNGEW.	RL 092.5910	300.5192
R411	RL 0,35W 47,5 OHM+-1%TK50 RESISTOR DRALORIC SMA0207/47,50HM-F-D	RL 082.9507	300.5192
R412	RL 0,35W 82,5KOHM+-1%TK50 RESISTOR DRALORIC SMA0207/82,5K-F-C	RL 082.2302	300.5192

Für diese Unterlage behalten wir uns alle Rechte vor

Kennzeichen Component No.	Benennung/Beschreibung Designation	Sachnummer Stock No.	enthalten in contained in
R414	RL 0,21W 274 OHM+-1%TK50 RESISTOR RESISTA MK1 2740HM 1% TK50	RL 092.1373	300.5192
R418	RL 0,21W 1,82KOHM+-1%TK50 RESISTOR RESISTA MK1 1K82 1% TK50	RL 092.1473	300.5192
R419	RL 0,21W 10 OHM2% UNGEW. RESISTOR RESISTA MK1 100HM 2% UNGEW.	RL 092.5833	300.5192
R420	RL 0,21W 330 OHM2% UNGEW. RESISTOR RESISTA MK1 3300HM 2% UNGEW.	RL 092.6017	300.5192
R421	RL 0,21W 470 OHM2% UNGEW. RESISTOR RESISTA MK1 4700HM 2% UNGEW.	RL 092.6030	300.5192
R422	RL 0,21W 680 OHM2% UNGEW. RESISTOR RESISTA MK1 6800HM 2% UNGEW.	RL 092.6052	300.5192
R423	RL 0,21W 47,5 OHM+-1%TK50 RESISTOR RESISTA MK1 47,50HM 1% TK50	RL 092.1267	300.5192
R424	RL 0,21W 10 OHM2% UNGEW. RESISTOR RESISTA MK1 100HM 2% UNGEW.	RL 092.5833	300.5192
R425	RL 0,35W 150 OHM+-1%TK50 RESISTOR DRALORIC SMA0207/1500HM-F-D	RL 082.9942	300.5192
R426	RL 0,35W 150 OHM+-1%TK50 RESISTOR DRALORIC SMA0207/1500HM-F-D	RL 082.9942	300.5192
R500	RL 0,21W 562 OHM+-1%TK50 RESISTOR RESISTA MK1 5620HM 1% TK50	RL 092.1415	300.5192
R501	RL 0,21W 1,00KOHM+-1%TK50 RESISTOR RESISTA MK1 1K00 1% TK50	RL 092.1444	300.5192
R502	RL 0,21W 75,0 OHM+-1%TK50 RESISTOR DRALORIC SMA0204 75 OHM 1%	RL 092.0119	300.5192
R503	RL 0,21W 274 OHM+-1%TK50 RESISTOR RESISTA MK1 2740HM 1% TK50	RL 092.1373	300.5192
R504	RL 0,21W 825 OHM+-1%TK50 RESISTOR RESISTA MK1 8250HM 1% TK50	RL 092.1438	300.5192
R505	RL 0,21W 1,50KOHM+-1%TK50 RESISTOR RESISTA MK1 1K5 1% TK50	RL 092.1467	300.5192
R506	RL 0,21W 475 OHM+-1%TK50 RESISTOR RESISTA MK1 4750HM 1% TK50	RL 092.1409	300.5192
R507	RL 0,21W 825 OHM+-1%TK50 RESISTOR RESISTA MK1 8250HM 1% TK50	RL 092.1438	300.5192
R508	RL 0,35W 12,1KOHM+-1%TK50 RESISTOR DRALORIC SMA0207/12,1K-F-D	RL 083.1351	300.5192

Kennzeichen Component No.	Benennung/Beschreibung Designation	Sachnummer Stock No.	enthalten in contained in
R600	RL 0,35W 1KOHM+-1%TK50 RESISTOR DRALORIC SMA0207/1K-F-C	RL 082.2160	300.5192
R601	RL 0,35W 4,75KOHM+-1%TK50 RESISTOR DRALORIC SMA0207/4,75K-F-D	RL 083.1097	300.5192
R602	RS 0,5W500 OHM+-10%10X10X CERMET POTENTIOMETER T BOURNS 3386F-1-501	RS 247.7878	300.5192
R603	RL 0,35W 1KOHM+-1%TK50 RESISTOR DRALORIC SMA0207/1K-F-C	RL 082.2160	300.5192
R604	RL 0,35W 562 OHM+-1%TK50 RESISTOR DRALORIC SMA0207/562OHM-F-D	RL 083.0461	300.5192
R605	RL 0,21W 4,75KOHM+-1%TK50 RESISTOR RESISTA MK1 4K75 1% TK50	RL 092.1521	300.5192
ST1	FP EINZELKONTAKTSTIFT SINGLE-CONTACT PIN ULMIC R&S.ZCHNG.300.8804	300.8804	300.5211
BIS/TO ST14			
ST90	ENTHALTEN IN/INCLUDED IN LEITERPLATTE/PCB		300.5211
ST96	FJ EINBAUWINKELST. SMC ANGLE CONNECTOR RADIALL R 112 669	FJ 249.9684	300.5192
ST98	FJ EINBAUWINKELST. SMC ANGLE CONNECTOR RADIALL R 112 669	FJ 249.9684	300.5192
T1	AM BF961 N-DUAL-G.MOSF MOS-FET SIEMENS BF961	303.9130	300.5192
T3	AM U310 NKAN 25V FET FET SILICONIX U310	AM 454.6217	300.5192
T30	AK BFW30 NPN 10V >1GHZ TRANSISTOR VALVO BFW30	AK 010.6582	300.5192
T31	AK BFW30 NPN 10V >1GHZ TRANSISTOR VALVO BFW30	AK 010.6582	300.5192
T32	AM U310 NKAN 25V FET FET SILICONIX U310	AM 454.6217	300.5192
T102	AK BSX29 PNP 12V 200MA TRANSISTOR SGS BSX29	AK 010.3031	300.5192
T200	AM 3N204 N-DUAL-G.MOSF MOS-FET RCA 3N204	AM 204.1910	300.5192
T201	AM U310 NKAN 25V FET FET SILICONIX U310	AM 454.6217	300.5192

Für diese Unterlage behalten wir uns alle Rechte vor

Kennzeichen Component No.	Benennung/Beschreibung Designation	Sachnummer Stock No.	enthalten in contained in
T300	AM U310 NKAN 25V FET FET SILICONIX U310	AM 454.6217	300.5192
T350	AM 3N204 N-DUAL-G.MOSF MOS-FET RCA 3N204	AM 204.1910	300.5192
T400	AK BFW30 NPN 10V >1GHZ TRANSISTOR VALVO BFW30	AK 010.6582	300.5192
T401	AK BFW30 NPN 10V >1GHZ TRANSISTOR VALVO BFW30	AK 010.6582	300.5192
T402	AM 3N204 N-DUAL-G.MOSF MOS-FET RCA 3N204	AM 204.1910	300.5192
T403	AK BFW30 NPN 10V >1GHZ TRANSISTOR VALVO BFW30	AK 010.6582	300.5192
T404	AK BFW30 NPN 10V >1GHZ TRANSISTOR VALVO BFW30	AK 010.6582	300.5192
T500	AK 2N2369A NPN 15V 200MA TRANSISTOR VALVO 2N2369A	AK 010.4680	300.5192
T600	AL BD139 NPN 80V 1A0 TRANSISTOR VALVO BD139	AL 274.8994	300.5192
T601	AK BCY59IX NPN 45V 200MA TRANSISTOR SIEMENS BCY59IX	AK 010.5163	300.5192
T602	AL BDX36 NPN 60V 5A0 TRANSISTOR VALVO BDX 36	AL 332.4291	300.5192
T604	AK BCY59IX NPN 45V 200MA TRANSISTOR SIEMENS BCY59IX	AK 010.5163	300.5192
TR200	LU UEBERTRAGER TRANSFORMER	451.1937	300.5192
TR602	LU UEBERTRAGER TRANSFORMER	451.1937	300.5192
			- ENDE -

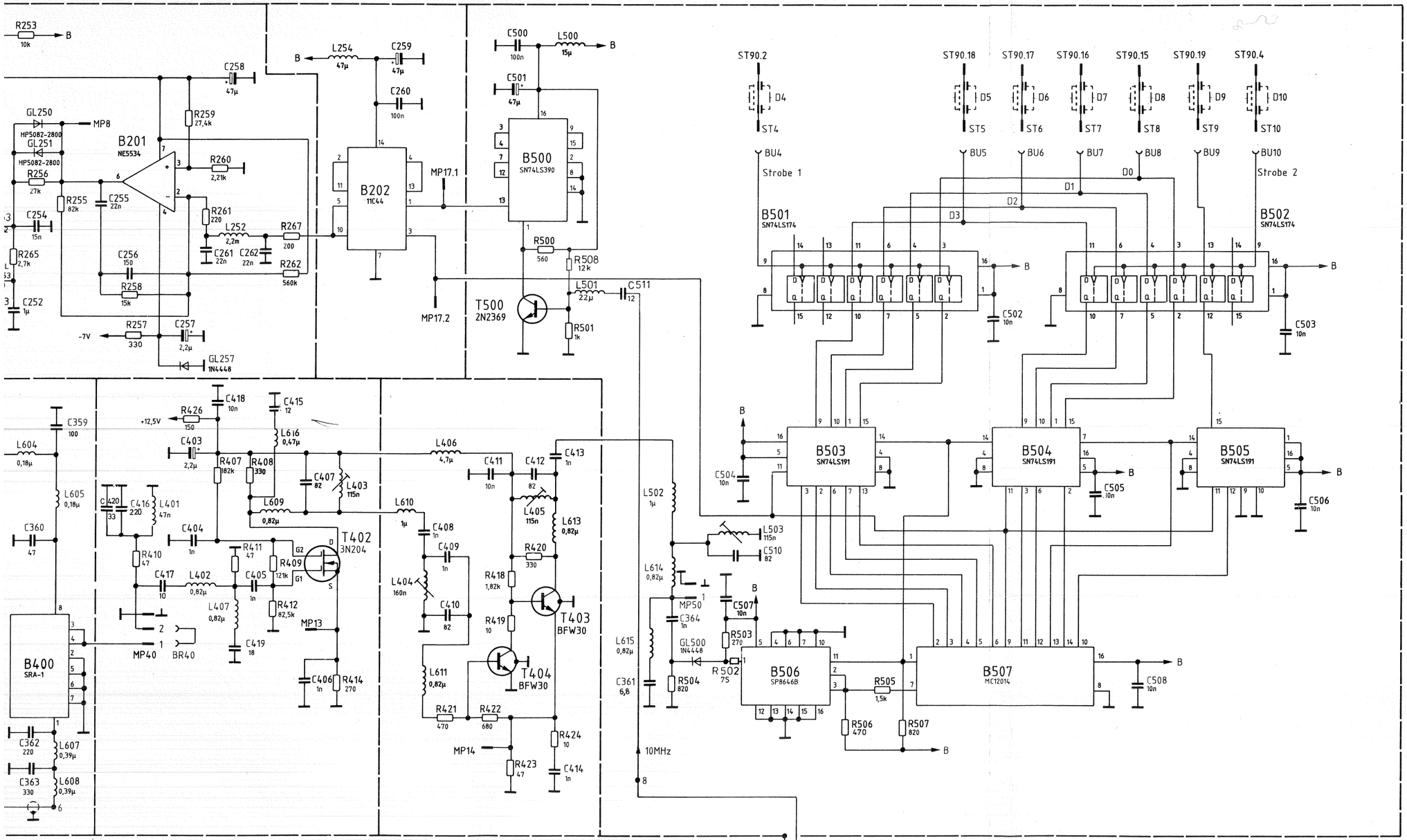

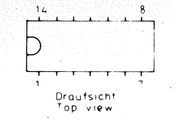

B150,B151,B200,B202

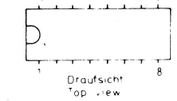

B100,B500-B507



Draufsicht
Top view
B201



T102,T500,T601
T602,T604



T30,T31,T100
T101,T300-T303,T400
T401,T403,T404



T200,T350,T402

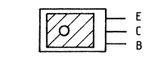

T600,T603



T3,T32,T201,T300

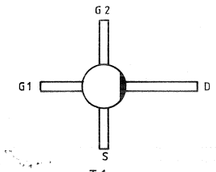

T 1

(Platte) Interpolationssynthesizer III 300.5192 (PCB) Interpolation synthesizer III	
Zuführung-Interpol.-synth. III 300.5211 Feed-Interpol.-synth. III	

Stromlauf zu	Interpolationssynthesizer III Interpolation synthesizer III			Zeichn.-Nr.	Blatt-Nr.
	reg. i. V.	300.1000 V	erste Z. 300.1000	300.4415 S	v. Bl.

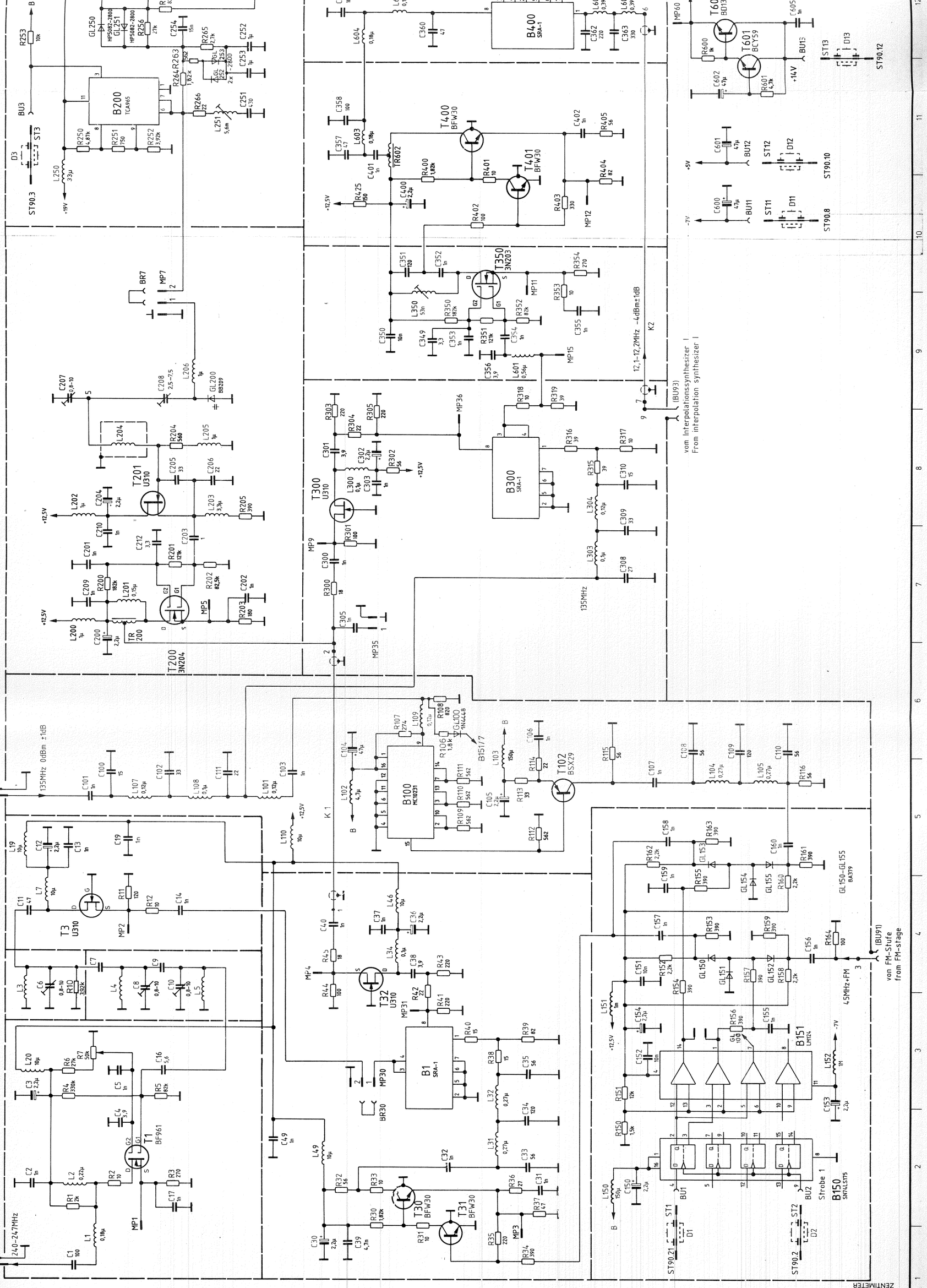

Für diese Zeichnung behalten wir uns alle Rechte vor
ROHDE & SCHWARZ

| Zeichn.-Nr. | | |

Ansicht und Leitungsführung Bauteilseite
View of tracks on component side

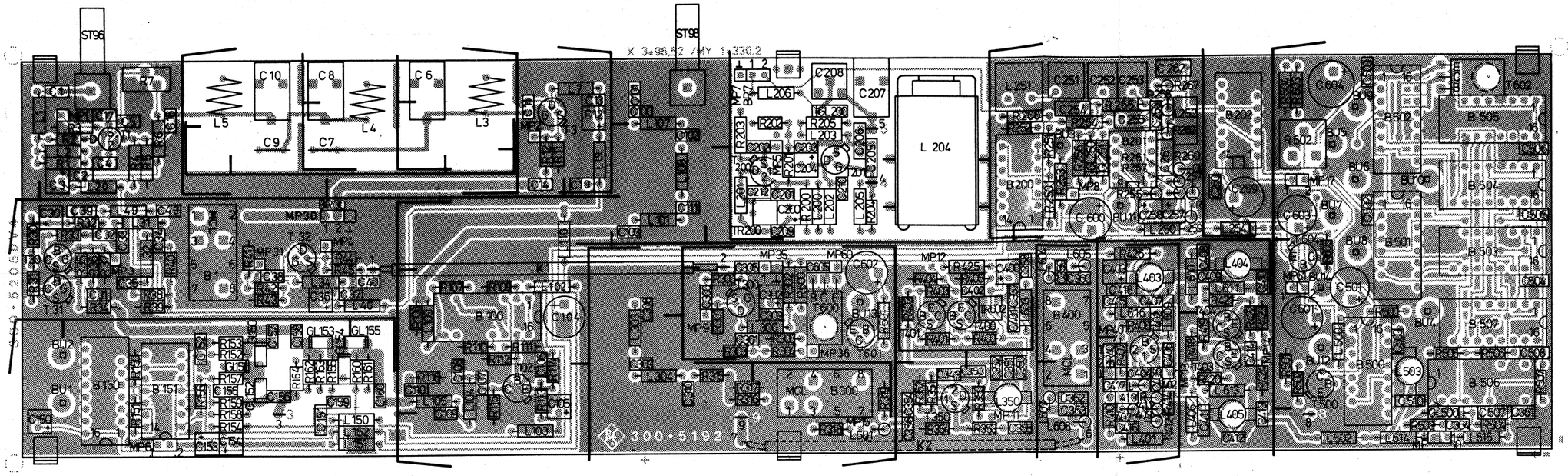

Ansicht und Leitungsführung Lötseite
View of tracks on solder side

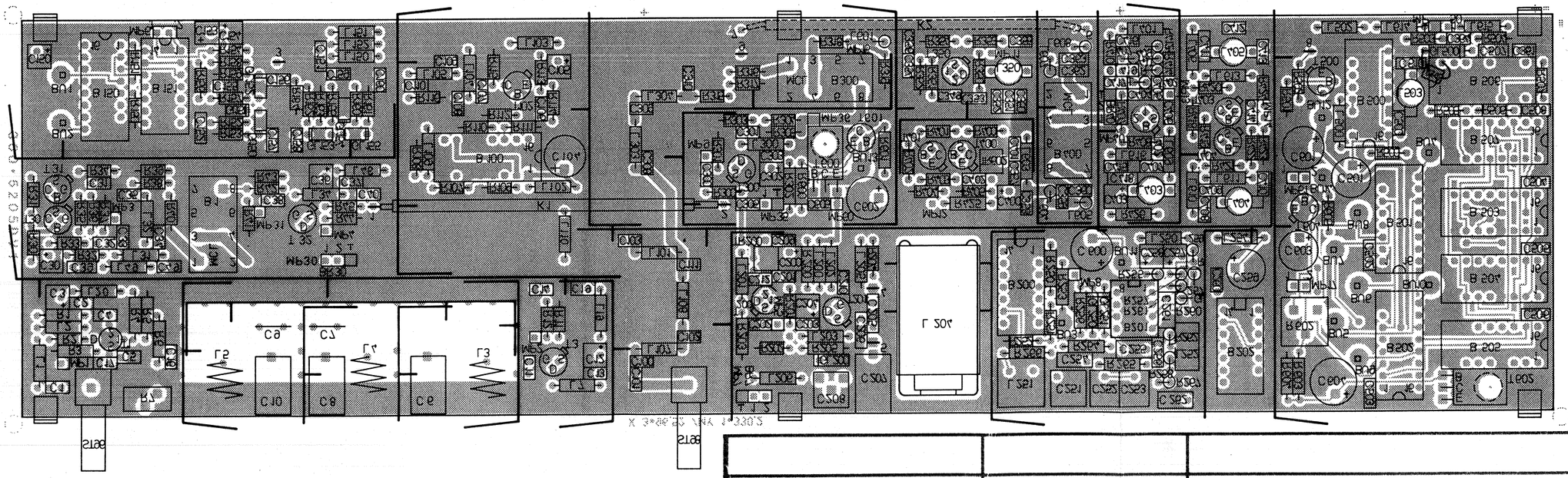

Für diese Zeichnung behalten wir uns alle Rechte vor.

Versorg.-Nr.			
H	27860	10.81	LS
J	27860	11.82	LS
K	32288	11.84	GS

Maße ohne Toleranzangabe

VG-Sachnr.

Maßstab 1 : 1

Halbzeug-Werkstoff

1GMA	Tag	Name
Bearb.	1.9.81	LS
Gepr.		
Norm.		

Benennung

Interpolationssynthesizer III

Interpolation - synthesizer III

Z

ROHDE & SCHWARZ MÜNCHEN

300.5192

Blatt-Nr. 2

SMPC

300.1000V

300.4415

Ansicht und Leitungsfuhrung Bauteilseite
View of tracks on component side

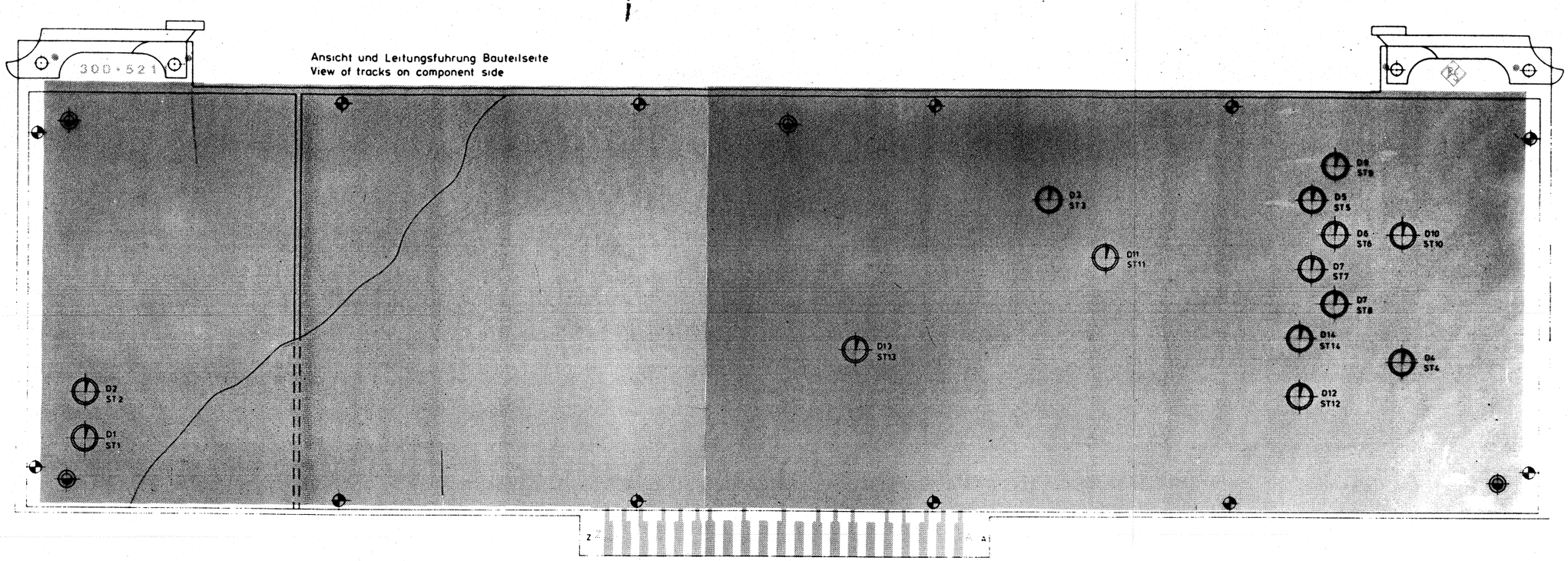

Ansicht und Leitungsfuhrung Lotseite
View of tracks on solder side

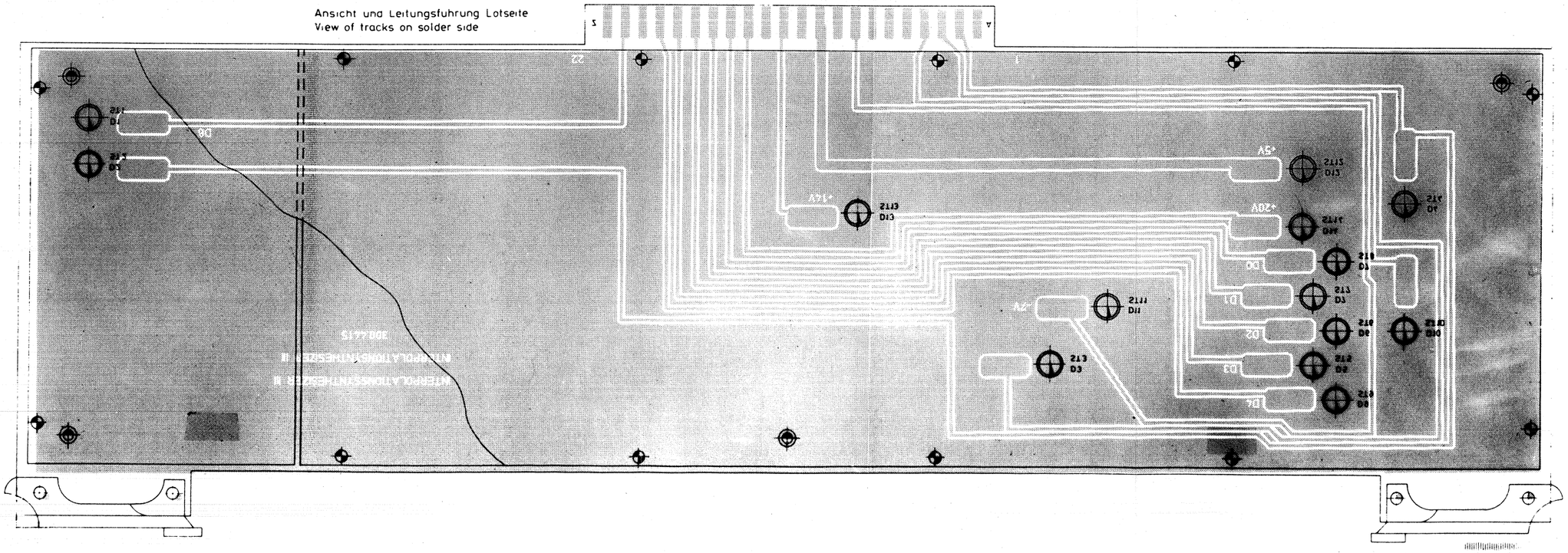

1 2 3 cm

C 23.7.79 LS		2 1
	IGMA 23.7.79 LS	Zufuhrung Interpol III Z Feed interpolation synthesizer III
	ROHDE & SCHWARZ SMPC	300.5211 300.1000 V 300.4415

ROHDE&SCHWARZ

SERVICE INSTRUCTIONS FOR

SMPC Buffer

300.3219 (Y7)

Table of Contents

		Page
5	Service Instructions for SMPC Buffer 300.3219 (Y7)	5.1
5.1	Circuit Description	5.1
5.1.1	Phase Control Loop	5.1
5.2	Checking and Adjusting	5.2
5.2.1	Buffer Oscillator 300.5157	5.2
5.2.1.1	Checking and Adjusting the Pulling Range (C101, C102)	5.2
5.2.1.2	Checking the Modulation Distortion and Setting the Working Point of the Deviation Diode GL103 (R1)	5.2
5.2.1.3	Checking the Deviation Corrector	5.2
5.2.1.4	Adjusting the Deviation Corrector (R4)	5.3
5.2.2	Buffer Control 300.6018	5.3
5.3	Troubleshooting	5.3
5.3.1	Nominal DC Voltages	5.3
5.3.2	Nominal AC Values (CW Operation)	5.4
5.3.3	Lock-aid	5.4
5.3.4	Phase Control	5.4
5.3.5	Control	5.4
5.3.6	Oscillator	5.4
5.4	Interfaces	5.5
5.4.1	Analog Interface	5.5
5.4.2	Digital Interface	5.6

Parts list
Circuit diagram
Component parts lists

5.1 Circuit Descriptions

(see circuit diagram 300.3219 S and Fig. 5-1)

The SMPC Buffer operates as a tracking narrow-band filter. It attenuates spurious responses from the frequency synthesizer and defines the noise level of the SMPC near the carrier. Since the SMPC Buffer must also transfer frequency modulated signals, the buffer oscillator has an additional modulator diode with which modulation outside the bandwidth of the phase control loop can be provided. If the deviation is greater than 20 kHz, the oscillator is switched off and the signal is fed, via an amplifier, directly to the output.

5.1.1 Phase Control Loop

The signal from Y6 (Interpol. Synth. III) is divided by 24 in B3 and B4. The output signal from the buffer oscillator is divided in B8 and B9. Phase comparison occurs at 10 MHz in B10. In order to achieve a fast response time, the bandwidth of the control loop can be switched by B12. The switching is done automatically when the phase comparison voltage from B10 moves outside the range of window comparator B14. The retriggerable monostable B15 determines the minimum switching time. A microprocessor-controlled switchover is possible via T26. For large jumps in frequency, a lock-on circuit, comprising B5, B6 and B7, provides charging current for C51 of the phase control loop. B5 is a frequency sensitive phase detector, B6 a window comparator and B7 contains two monostables which, via T19, T20 and T21, feed the charging current in the required direction.

Modulation

For modulating purposes, the SMPC Buffer is fed with a deviation-proportional AF signal from Y2 (FM Stage). Because the deviation slope of the modulation diode of the buffer oscillator varies with centre frequency, a microprocessor-controlled deviation corrector B1 is provided. The optimum working point of the modulation diode GL103 is set with R1, R4 sets the deviation correction and R5 minimizes the difference deviation to the input signal. With large deviations, T1 to T3 provide a negative control voltage which switches on amplifier T15 via T16 and feeds the amplifier input signal to output ST104 via the diode switch GL5 to GL8. At the same time, T4 and T5 switch the buffer oscillator off.

T7 to T11 protect the power supply from interference.

5.2 Checking and Adjusting

5.2.1 Buffer Oscillator 300.5157

5.2.1.1 Checking and Adjusting the Pulling Range (C101, C102)

Connect a frequency counter to ST104. Remove BR11. Connect a DC source of 1 to 17 V to MP11.1. Switch FM off on the SMPC. Check the following nominal values and if necessary adjust with C101 and C102.

Voltage at MP11.1	Frequency
1 ±0.05 V	239 ±0.4 MHz
17 ±0.1 V	248 ±0.4 MHz

Seal the holes in the subassembly above C101 and C102 with aluminium foil.

5.2.1.2 Checking the Modulation Distortion and Setting the Working Point of the Deviation Diode GL103 (R1)

Use R1 to adjust 5 V at MP17 on the XPC. The following applies to the SMPC only:

Connect a distortion meter (generator) to BU101, a modulation analyzer to ST104 and the distortion meter (analyzer) to the modulation analyzer. The adjustment is simplified if an oscilloscope switched to X-Y operation is connected to BU101 and the monitor output of the distortion meter.

Set the SMPC to 690 MHz carrier frequency, 0.01 kHz modulation frequency and 0.01 kHz deviation. Set the generator of the distortion meter to a modulation frequency of 5 kHz and a deviation of approximately 20 kHz. Measure the distortion of the demodulated signal with a 20-kHz low-pass filter. Repeat the measurement with carrier frequencies of 680 and 699 MHz. The distortion is to be < -55 dB. Adjust for minimum distortion with R1. Typically, the working point voltage measured at MP17 is 10 V.

5.2.1.3 Checking the Deviation Corrector (SMPC only)

Connect a modulation analyzer to ST104. Set the SMPC to 680.7 MHz carrier frequency, 5 kHz modulation frequency and 50 kHz deviation. Measure the deviation at ST104 (18 kHz approx.). Repeat the measurement at the following carrier frequencies: 682, 683.5, 685, 686.4, 687.8, 689.2, 690.6, 692, 693.5, 695, 696.3, 697.7 and 699.1 MHz. The corresponding deviations should not vary from the first value by more than 1.5%.

5.2.1.4 Adjusting the Deviation Corrector (R4) (SMPC only)

Connect a signal generator set to 240 to 247 MHz and 4 dBm to ST105. Set the SMPC to 240 MHz carrier frequency, 5 kHz modulation frequency and 19 kHz deviation. Connect the modulation analyzer to ST104. Adjust for minimum deviation with R4. Feed 240 and then 247 MHz into ST105; measure and record the deviations obtained.

Carry out the following calculations:

H1 = deviation at 247 MHz
H2 = deviation at 240 MHz
R1 = 4280 x (H1/H2 - 1)
R2 = R1 x 1060/(1060 - R1)
F = 2060/(R2 + 1060)
H3 = F x H2

H3 is the new deviation to be set with R4 at a frequency of 240 MHz. Finally set the deviation to 19 kHz with R5. Then carry out the deviation adjustments according to 4.3.9.

5.2.2 Buffer Control 300.6018

5.2.2.1 Checking the Synchronization

Connect an oscilloscope to MP18. Vary the SMPC carrier frequency between 680 and 699.9 MHz. The voltage at MP18 must vary with the carrier frequency between 2.7 ±0.5 V and 15.3 ±0.5 V.

5.3 Troubleshooting

5.3.1 Nominal DC Voltages

MP1 10.5 ±0.5 V
MP2 -3.5 ±1 V
MP4 -6.4 ±0.3 V
MP5 19.4 ±0.3 V

Test point	Without FM	FM, max. deviation
MP3	-3.5 ±1 V	0 -0.3 V
MP15	0 V	2.9 ±0.3 V
MP16	5 ±0.5 V	-6 ±1 V

5.3.2 Nominal AC Values (CW Operation)

K2, terminal 5	14 ±3 dBm	240 to 247 MHz
MP6	TTL level	10 to 10.3 MHz
MP7	TTL level	10 to 10.3 MHz

5.3.3 Lock-aid

Remove BR11. Apply 8 V_{DC} to MP11.1. At the XPC/SMPC, vary the carrier frequency without modulation between 680 and 699.9 MHz. With low frequencies at MP8 and high frequencies at MP9, a TTL pulse train should appear whose frequency is dependent on the amount of detuning. At approximately 690 MHz, the voltage at MP18 should jump from 0 V to 18 V.

5.3.4 Phase Control

Set up as in 5.3.3. When the frequency is varied, a sinusoidal oscillation of approximately 400 mV_{pp} should appear at MP14; its frequency is to be a minimum at approximately 690 MHz.

5.3.5 Control

Test point	CW	Small deviation FM	Large deviation FM
MP3	-3.5 ±1 V	-3.5 ±1 V	0 V
MP16	5 ±0.5 V	5 ±0.5 V	-7 ±0.5 V

During CW operation, -7 ±0.5 V is present at MP12. When a frequency change occurs, the voltage jumps to 20 ±0.5 V for approximately 3 ms and for FM operation approximately 5 ms.

5.3.6 Oscillator

In the event of excessive microphonic noise or a failure, check L106 and L107. Both inductors must be glued to the PCB and the windings must remain free of glue.

5.4 Interfaces

5.4.1 Analog Interface

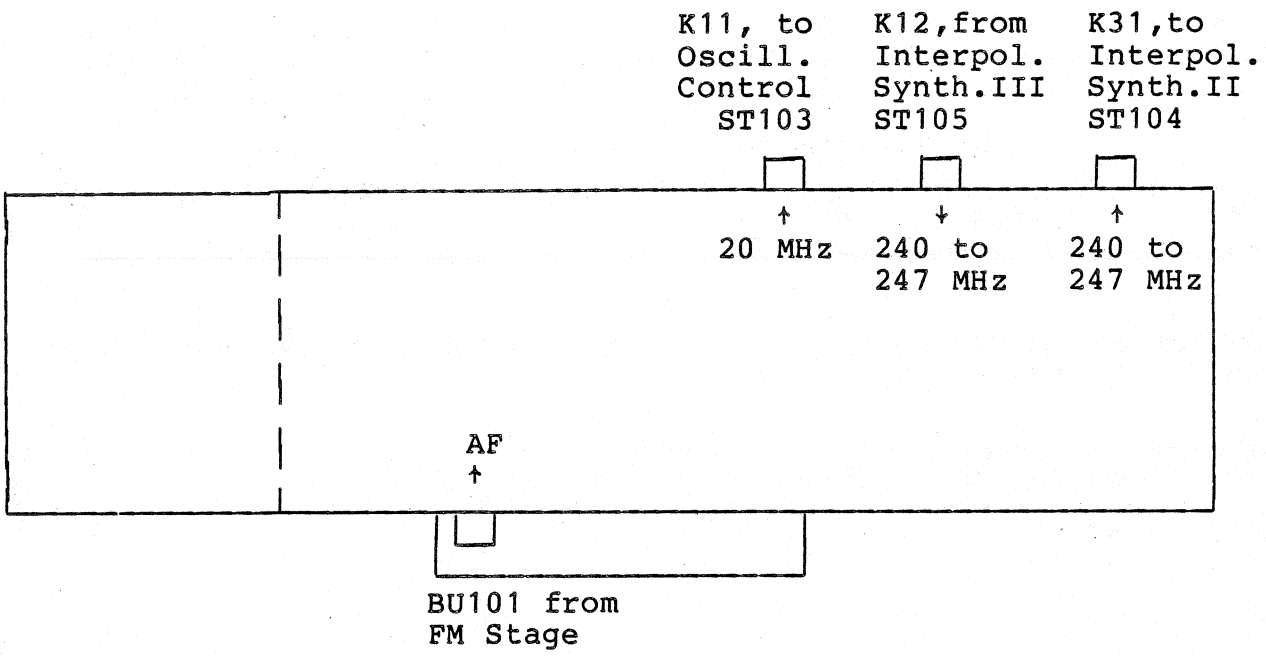

ST/BU	101	103	104	105
f	0 to 100 kHz	20MHz	240...247MHz	240...247 MHz
Level	up to 1.67 V_p	0.6±0,2 V_{pp}	8±2 dBm	4±1 dBm
R_i	1.5kΩ approx.	50 Ω	50 Ω	50 Ω
Coupling	DC	AC	DC	DC
Shape of curve		square		sine

5.4.2 Digital Interface

1 data word with 6 bits, strobe at ST100.11

ST 100	D5 20	D4 19	D3 18	D2 17	D1 16	D0 15
1	fast	off	MSB ———			LSB
	loop	oscillator	Deviation Corrector			
0	slow	on				

The deviation corrector is switched in 500-kHz steps dependent on the buffer frequency.

Buffer frequency MHz	Deviation corrector
240 to < 240.5	0 0 0 0
240.5 to < 241	0 0 0 1
241 to < 241.5	0 0 1 0
⋮	⋮
247 to < 247.5	1 1 1 0

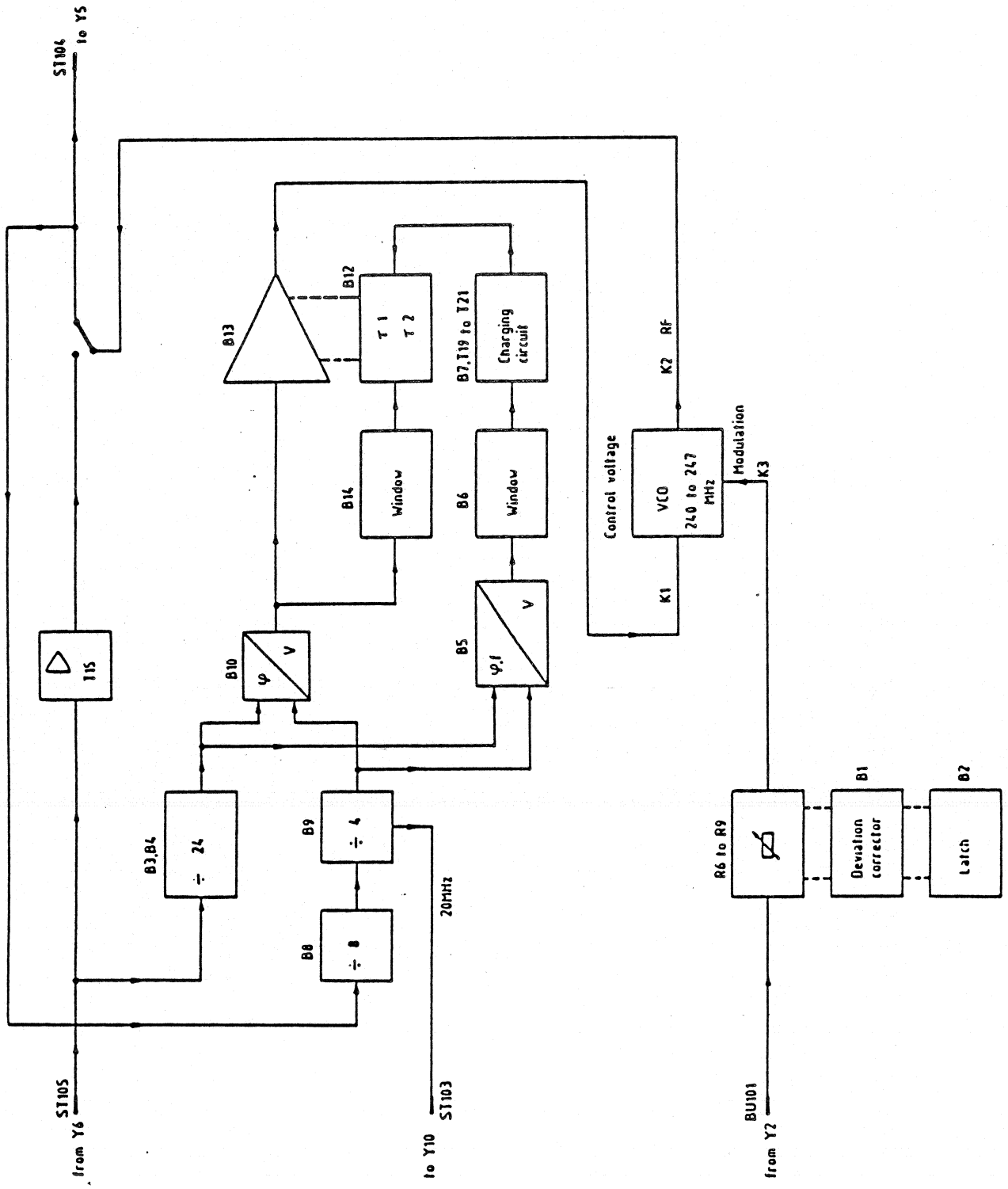

Fig. 5-1 Block diagram of SMPC Buffer

ROHDE & SCHWARZ
MÜNCHEN

Schaltteillisten
Stromläufe
Bestückungspläne

Parts lists
Circuit diagrams
Components plans

R 29500 Bl. 2

ROHDE&SCHWARZ	ÄZ 30	Datum Date 0686	Schaltteilliste für Parts list for ZE SMPC-PUFFER SMPC-BUFFER	Sachnummer Stock No. 300.3219.00 SA	Blatt Page 1

Kennzeichen Component No.	Benennung/Beschreibung Designation	Sachnummer Stock No.	enthalten in contained in
B1	BL CD4066BE 4XANALOGSCH ANALOG SWITCH RCA CD4066BE	BL 290.3906	300.6018
B2	BL SN74LS174N 6/D-FLIPFL. IC FLIP-FLOP SN74LS174N TEXAS SN74LS174N	266.7970	300.6018
B3	BL SP8741BDG 7:1DIVID UHF DIVIDER PLESSEY SP8741BDG	BL 300.6899	300.6018
B4	BL SN74S74N 2/D-FLIPFLOP IC FLIP-FLOP SN74S74N TEXAS SN74S74N	266.6621	300.6018
B5	BL MC4344L PHASE-L-L PHASE LOCKED LOOP MOTOROLA MC4344L	BL 475.1266	300.6018
B6	BO TL820CN 2X COMPAR COMPARATOR TEXAS TL820CN	230.2278	300.6018
B7	BL SN74LS123N 2/MONOFLOP IC MONOFLOP SN74LS85N TEXAS SN74LS123N	235.8468	300.6018
B8	BL SP8741BDG 7:1DIVID UHF DIVIDER PLESSEY SP8741BDG	BL 300.6899	300.6018
B9	BL SN74S74N 2/D-FLIPFLOP IC FLIP-FLOP SN74S74N TEXAS SN74S74N	266.6621	300.6018
B10	BM SRA1 MIXER 0.5GHZ MIXER MINI-CCTS SRA1	BM 207.3465	300.6018
B11	BL SN74LS04N 6/INVERTER HEXINVERTER TEXAS SN74LS04N	266.2010	300.6018
B12	BJ IH401AJE 4X ANALOGSCH ANALOG SWITCH INTERSIL IH401AJE	BJ 334.3870	300.6018
B13	BO LF356BJ BIFET OPAMP OPERATIONAL AMPLIFIER MOTOROLA LF356J	300.6053	300.6018
B14	BO TL820CN 2X COMPAR COMPARATOR TEXAS TL820CN	230.2278	300.6018
B15	BL SN74LS122N MONOFLOP IC MONOFLOP SN74LS122N TEXAS SN74LS122N	303.8957	300.6018
B101	BD DIODEN-OKTETT DIODE-OKTETT DUENNSCHICHT-SPEZ.TEIL SPECIAL THIN-FILM CIRC.	914.0406	300.5157
BR11	FP KURZSCHLUSSBUCHSE SHORTING PLUG PK 452-70302	FP 491.7042	300.6018
BU1	FP BUCHSE VERTIKAL P.V.1P SOCKET BERG 75377-001	FP 278.5577	300.6018

300.3219.00 SA BL 1+

Für diese Unterlage behalten wir uns alle Rechte vor

Kennzeichen Component No.	Benennung/Beschreibung Designation	Sachnummer Stock No.	enthalten in contained in
BIS/TO BU7			
BU10	FP BUCHSE VERTIKAL P.V.1P SOCKET BERG 75377-001	FP 278.5577	300.6018
BIS/TO BU15			
BU101	FJ EINBAUBUCHSE SYST.SMS FIXED SOCKET RADIALL R.299 012	300.6876	
C1	CE 10UF -10+50% 63V 9X13 ELECTROLYTIC CAPACITOR ROEDERST ELKOEK10/63	CE 022.7650	300.6018
C2	CK 220NF+-5%63V5RM MKT CAPACITOR WIMA MKS2/63/0,22UF/5%	CK 099.2952	300.6018
R C3	CE RICHTIGE SNR. 006.7142 ELECTROLYTIC CAPACITOR SIEMENS B41316-B7476-Z	022.7589	300.6018
R C4	CE RICHTIGE SNR. 006.7142 ELECTROLYTIC CAPACITOR SIEMENS B41316-B7476-Z	022.7589	300.6018
R C5	CE RICHTIGE SNR. 006.7142 ELECTROLYTIC CAPACITOR ROEDERST ELKO EK47/16	022.7543	300.6018
C6	CE 220UF-10+50%6V 8,7X13 ELEKTROLYTIC CAPACITOR ROEDERST EK 00 CB 322 B	CE 022.7520	300.6018
C7	CE 220UF-10+50%6V 8,7X13 ELEKTROLYTIC CAPACITOR ROEDERST EK 00 CB 322 B	CE 022.7520	300.6018
C8	CE 100UF-10+50% 25V 13X13 ELECTROLYTIC CAPACITOR ROEDERST ELKOEK100/25	CE 208.4007	300.6018
C9	CE 100UF-10+50% 25V 13X13 ELECTROLYTIC CAPACITOR ROEDERST ELKOEK100/25	CE 208.4007	300.6018
R C10	CE RICHTIGE SNR. 006.7142 ELECTROLYTIC CAPACITOR SIEMENS B41316-B7476-Z	022.7589	300.6018
C11	CC 47NF+-10%50V5K1200VIEL CAPACITOR UNION CARB CK05BX473K	CC 082.7810	300.6018
C12	CC 12PF+-2%3X4NP0 CAPACITOR VALVO 2222 678 10129	CC 087.6435	300.6018
C13	CC 8,2PF+-0,25PF3X4NP0 CAPACITOR VALVO 2222 678 09828	CC 087.6412	300.6018
C14	CC 15PF+-2%3X4NP0 CAPACITOR VALVO 2222 678 10159	CC 087.6441	300.6018
C15	CC 1NF+-10%63V K2000 CERAMIC CAPACITOR VALVO 2222 63051 102	CC 022.0784	300.6018

Kennzeichen Component No.	Benennung/Beschreibung Designation	Sachnummer Stock No.	enthalten in contained in
C16	CC 1NF+-10%63V K2000 CERAMIC CAPACITOR VALVO 2222 63051 102	CC 022.0784	300.6018
C17	CC 1NF+-10%63V K2000 CERAMIC CAPACITOR VALVO 2222 63051 102	CC 022.0784	300.6018
C18	CC 1NF+-10%63V K2000 CERAMIC CAPACITOR VALVO 2222 63051 102	CC 022.0784	300.6018
C19	CC 10NF-20+50%7X8R6000 CAPACITOR VALVO 2222 63051 64051103	CC 087.7525	300.6018
C20	CC 10NF-20+50%7X8R6000 CAPACITOR VALVO 2222 63051 64051103	CC 087.7525	300.6018
C21	CE 100UF-10+50% 16V 9X13 ELECTROLYTIC CAPACITOR ROEDERST EK 00CB 310 D	CE 006.7165	300.6018
C22	CE 100UF-10+50% 16V 9X13 ELECTROLYTIC CAPACITOR ROEDERST EK 00CB 310 D	CE 006.7165	300.6018
C25	CC 1NF+-10%63V K2000 CERAMIC CAPACITOR VALVO 2222 63051 102	CC 022.0784	300.6018
C26	CC 100NF+-10%50V5K1200VIE CAPACITOR UNION CARB CK05BX104K	CC 084.5350	300.6018
C27	CC 1NF+-10%63V K2000 CERAMIC CAPACITOR VALVO 2222 63051 102	CC 022.0784	300.6018
C28	CC 1NF+-10%63V K2000 CERAMIC CAPACITOR VALVO 2222 63051 102	CC 022.0784	300.6018
C29	CC 1NF+-10%63V K2000 CERAMIC CAPACITOR VALVO 2222 63051 102	CC 022.0784	300.6018
C30	CC 100NF+-10%50V5K1200VIE CAPACITOR UNION CARB CK05BX104K	CC 084.5350	300.6018
C31	CC 1NF+-10%63V K2000 CERAMIC CAPACITOR VALVO 2222 63051 102	CC 022.0784	300.6018
C32	CC 1NF+-10%63V K2000 CERAMIC CAPACITOR VALVO 2222 63051 102	CC 022.0784	300.6018
C33	CC 100NF+-10%50V5K1200VIE CAPACITOR UNION CARB CK05BX104K	CC 084.5350	300.6018
C34	CC 100NF+-10%50V5K1200VIE CAPACITOR UNION CARB CK05BX104K	CC 084.5350	300.6018
C35	CC 10NF-20+50%7X8R6000 CAPACITOR VALVO 2222 63051 64051103	CC 087.7525	300.6018
C36	CC 100NF+-10%50V5K1200VIE CAPACITOR UNION CARB CK05BX104K	CC 084.5350	300.6018

Für diese Unterlage behalten wir uns alle Rechte vor

Kennzeichen Component No.	Benennung/Beschreibung Designation	Sachnummer Stock No.	enthalten in contained in
C37	CC 100PF+-2%6X9NP0 CAPACITOR VALVO 2222 678 10101	CC 087.6541	300.6018
C38	CC 100PF+-2%6X9NP0 CAPACITOR VALVO 2222 678 10101	CC 087.6541	300.6018
C39	CC 100PF+-2%6X9NP0 CAPACITOR VALVO 2222 678 10101	CC 087.6541	300.6018
C40	CC 100PF+-2%6X9NP0 CAPACITOR VALVO 2222 678 10101	CC 087.6541	300.6018
C41	CC 1NF+-10%63V K2000 CERAMIC CAPACITOR VALVO 2222 63051 102	CC 022.0784	300.6018
C42	CC 1NF+-10%63V K2000 CERAMIC CAPACITOR VALVO 2222 63051 102	CC 022.0784	300.6018
C43	CC 270PF+-2%6X9N750 CAPACITOR DRALORIC EDPU6X9/270/2%N750	CC 087.6958	300.6018
C44	CC 270PF+-2%6X9N750 CAPACITOR DRALORIC EDPU6X9/270/2%N750	CC 087.6958	300.6018
C45	CC 10NF-20+50%7X8R6000 CAPACITOR VALVO 2222 63051 64051103	CC 087.7525	300.6018
C46	CC 470PF+-10%3X4R2000 CAPACITOR VALVO 2222 63051 471	CC 087.6993	300.6018
C47	CC 4,7NF+-10%6X9R2000 CAPACITOR VALVO 2222 63051 472	CC 087.7102	300.6018
C48	CC 4,7NF+-10%6X9R2000 CAPACITOR VALVO 2222 63051 472	CC 087.7102	300.6018
C49	CC 10NF-20+50%7X8R6000 CAPACITOR VALVO 2222 63051 64051103	CC 087.7525	300.6018
C50	CC 10NF-20+50%7X8R6000 CAPACITOR VALVO 2222 63051 64051103	CC 087.7525	300.6018
C51	CK 470NF+-5%63V RD18X34KS CAPACITOR SCHUEMANN CKS470000/5/63/40	024.4335	300.6018
C52	CC 10NF-20+50%7X8R6000 CAPACITOR VALVO 2222 63051 64051103	CC 087.7525	300.6018
C53	CC 10NF-20+50%7X8R6000 CAPACITOR VALVO 2222 63051 64051103	CC 087.7525	300.6018
C54	CK 1UF+-10%50V5RM MKT CAPACITOR WIMA MKS2/50/1UF/10%	CK 099.2998	300.6018
C55	CK 470NF+-5%63V RD18X34KS CAPACITOR SCHUEMANN CKS470000/5/63/40	024.4335	300.6018

Kennzeichen / Component No.	Benennung/Beschreibung / Designation	Sachnummer / Stock No.	enthalten in / contained in
C56	CK 22NF+-5%63V5RM MKT CAPACITOR WIMA MKS2/63/0,022UF/5%	CK 099.2881	300.6018
C57	CK 22NF+-5%63V5RM MKT CAPACITOR WIMA MKS2/63/0,022UF/5%	CK 099.2881	300.6018
C60	CC 10NF-20+50%7X8R6000 CAPACITOR VALVO 2222 63051 64051103	CC 087.7525	300.6018
C101	CT 9,2 PF TAUCHTR.RD7X14 AIR-TYPE TRIMMER TEKELEC AT A070	CT 037.7980	300.5157
C102	CT 9,2 PF TAUCHTR.RD7X14 AIR-TYPE TRIMMER TEKELEC AT A070	CT 037.7980	300.5157
C103	CC 1,0PF+-0,25PF5P100 CAPACITOR VALVO 2222 654 03108	450.6841	300.5157
C104	CC 18PF 5% N750/IB RD5 CERAMIC CAPACITOR VALVO 2222 654 58189	006.0354	300.5157
C105	CC 10PF+-0,5PF5N750 CERAMIC CAPACITOR VALVO 2222 654 58109	006.0325	300.5157
C106	CC 1NF+-10%63V K2000 CERAMIC CAPACITOR VALVO 2222 63051 102	CC 022.0784	300.5157
C107	CC 1NF+-10%63V K2000 CERAMIC CAPACITOR VALVO 2222 63051 102	CC 022.0784	300.5157
C108	CC 1NF+80-20%R4000 TRAP CERAMIC CAPACITOR DRALORIC TRE7L0E1000/2080%R40	CC 086.7515	300.5157
C109	CC 1NF+80-20%R4000 TRAP CERAMIC CAPACITOR DRALORIC TRE7L0E1000/2080%R40	CC 086.7515	300.5157
C110	CC 1NF+80-20%R4000 TRAP CERAMIC CAPACITOR DRALORIC TRE7L0E1000/2080%R40	CC 086.7515	300.5157
C111	CB 1NF-20+50%HDK2000 DF-K FEED-THROUGH CAPACITOR DRALORIC 1000PFR2000N.ZEICHN.	CB 023.0020	
C112	CB 1NF-20+50%HDK2000 DF-K FEED-THROUGH CAPACITOR DRALORIC 1000PFR2000N.ZEICHN.	CB 023.0020	
C113	CB 1NF-20+50%HDK2000 DF-K FEED-THROUGH CAPACITOR DRALORIC 1000PFR2000N.ZEICHN.	CB 023.0020	
C114	CC 0,5PF+-0,25PF5P100 CAPACITOR VALVO 2222 654 03477	006.0019	300.5157
C115	CC 100PF+-2%6X9NP0 CAPACITOR VALVO 2222 678 10101	CC 087.6541	300.5157
D1	LD 35DB/200M-10GHZ PI-FIL CHOKE ERIE 1214-038	LD 300.6818	300.5170

Für diese Unterlage behalten wir uns alle Rechte vor

Kennzeichen Component No.	Benennung/Beschreibung Designation	Sachnummer Stock No.	enthalten in contained in
BIS/TO D7			
D10	LD 35DB/200M-10GHZ PI-FIL CHOKE ERIE 1214-038	LD 300.6818	300.5170
BIS/TO D15			
GL1	AD 1N4448 75V 0,15A UDI DIODE VALVO 1N4448	AD 012.0700	300.6018
GL5	AE BA379 25V PINDI DIODE BA379 SIEMENS BA379	244.7031	300.6018
GL6	AE BA379 25V PINDI DIODE BA379 SIEMENS BA379	244.7031	300.6018
GL7	AE BA379 25V PINDI DIODE BA379 SIEMENS BA379	244.7031	300.6018
GL8	AE BA379 25V PINDI DIODE BA379 SIEMENS BA379	244.7031	300.6018
GL10	AE 5082-2800 SCHOTTKYDI DIODE HEWLETT-P. 5082-2800	AE 012.9066	300.6018
GL11	AE 5082-2800 SCHOTTKYDI DIODE HEWLETT-P. 5082-2800	AE 012.9066	300.6018
GL12	AD BAV21 250V 0,25A UDI DIODE INTERMETAL BAV21	AD 082.6837	300.6018
GL102	AE 5082-2800 SCHOTTKYDI DIODE HEWLETT-P. 5082-2800	AE 012.9066	300.5157
GL103	AE BB909B 25/ 3PF CDI TUNING DIODE VALVO BB909B	AE 092.9600	300.5157
K1	DX HF-KABEL/RF-CABLE	356.0280	
K2	DX HF-KABEL RF CABLE	356.1686	
K3	DX HF-KABEL/RF-CABLE	300.3502	
L1	LD 0,047 UH 10% CHOKE INDUSTRIA BAUREIHE1025,0,047	249.5995	300.6018
L2	LD 1,00UH10%1,000HM0,390A CHOKE DELEVAN 1025-20	LD 067.2863	300.6018
L3	LD 1,00UH10%1,000HM0,390A CHOKE DELEVAN 1025-20	LD 067.2863	300.6018
L4	LD 1,50UH10%0,220HM0,560A CHOKE DELEVAN DROSSEL 1025-24	LD 067.2886	300.6018

Kennzeichen Component No.	Benennung/Beschreibung Designation	Sachnummer Stock No.	enthalten in contained in
L5	LD 47,0UH10%4,500HM0,110A CHOKE DELEVAN DROSSEL1025-60	LD 067.3060	300.6018
L6	LD 4,70UH10%1,200HM0,239A CHOKE DELEVAN DROSSEL1025-36	LD 067.2940	300.6018
L7	LD 220 UH10%21,00HM0,052A CHOKE DELEVAN DROSSEL1025-76	LD 067.3147	300.6018
L8	LD 220 UH10%21,00HM0,052A CHOKE DELEVAN DROSSEL1025-76	LD 067.3147	300.6018
L9	LD 1,50UH10%0,220HM0,560A CHOKE DELEVAN DROSSEL 1025-24	LD 067.2886	300.6018
L10	LD 4,70UH10%1,200HM0,239A CHOKE DELEVAN DROSSEL1025-36	LD 067.2940	300.6018
L11	LD 0,82UH10%0,850HM0,420A CHOKE DELEVAN DROSSEL1025-18	LD 067.2857	300.6018
L12	LD 18,0UH10%3,100HM0,149A CHOKE DELEVAN DROSSEL1025-50	LD 067.3018	300.6018
L13	LD 18,0UH10%3,100HM0,149A CHOKE DELEVAN DROSSEL1025-50	LD 067.3018	300.6018
L14	LD 180 UH10%17,00HM0,057A CHOKE DELEVAN DROSSEL1025-74	LD 067.3130	300.6018
L15	LD 1,00UH10%1,000HM0,390A CHOKE DELEVAN 1025-20	LD 067.2863	300.6018
L16	LD 10,0UH10%3,300HM0,144A CHOKE DELEVAN DROSSEL1025-44	LD 026.4184	300.6018
L101	ZM SCHWINGKREIS COIL	300.3425	300.5157
L102	LD 0,33UH10%0,220HM0,830A CHOKE DELEVAN DROSSEL1025--08	LD 067.2805	300.5157
L103	LD 0,33UH10%0,220HM0,830A CHOKE DELEVAN DROSSEL1025--08	LD 067.2805	300.5157
L104	LD 1,00UH10%1,000HM0,390A CHOKE DELEVAN 1025-20	LD 067.2863	300.5157
L105	LD 1,00UH10%1,000HM0,390A CHOKE DELEVAN 1025-20	LD 067.2863	300.5157
L106	LD SPULE COIL	300.3454	300.5157
L107	LD SPULE COIL	300.3483	300.5157
L108	LD 0,82UH10%0,850HM0,420A CHOKE DELEVAN DROSSEL1025-18	LD 067.2857	300.5157

Für diese Unterlage behalten wir uns alle Rechte vor

Kennzeichen Component No.	Benennung/Beschreibung Designation	Sachnummer Stock No.	enthalten in contained in
MP1	VL WIRE-WRAP PIN BERG NR. 75 403-001	VL 088.4507	300.6018
BIS/TO MP9			
MP11	FP INDIREKT.STECKERL.36P. PIN CONNECTOR BERG 75160-102-36	FP 242.3600	300.6018
MP12	VL WIRE-WRAP PIN BERG NR. 75 403-001	VL 088.4507	300.6018
MP13	VL WIRE-WRAP PIN BERG NR. 75 403-001	VL 088.4507	300.6018
MP14	VL DURCHF. 9 X 3,8X 3,2 FEED TROUGH KLAR&BEILS TFD 5 0.705	VL 016.1824	
MP15	VL WIRE-WRAP PIN BERG NR. 75 403-001	VL 088.4507	300.6018
BIS/TO MP18			
R1	RS 0,75W50KOHM+-10%CERMET DEPOS.-CARBON POTENTIOMET BOURNS 3006P-1-50 KOHM+-10%	RS 037.7421	300.6018
R2	RL 0,35W 100KOHM+-1%TK50 RESISTOR DRALORIC SMA0207/100K-F-C	RL 082.1764	300.6018
R3	RL 0,35W 10,0KOHM+-1%TK50 RESISTOR DRALORIC SMA0207/10K-F-D	RL 083.1297	300.6018
R4	RS 0,5W1KOHM+-10%10X10X5 CERMET POTENTIOMETER T BOURNS 3386F-1-102	RS 087.7560	300.6018
R5	RS 0,75W500OHM+-10%CERMET DEPOS.-CARBON POTENTIOMET BOURNS 3006P-1-500 OHM+-10%	RS 037.7350	300.6018
R6	RL 0,35W 68,1KOHM+-1%TK50 RESISTOR DRALORIC SMA 0207/68,1K-F-C	RL 082.2602	300.6018
R7	RL 0,35W 33,2KOHM+-1%TK50 RESISTOR DRALORIC SMA0207/33,2K-F-C	RL 083.1674	300.6018
R8	RL 0,35W 15,0KOHM+-1%TK50 RESISTOR DRALORIC SMA0207/15K-F-D	RL 083.1400	300.6018
R9	RL 0,35W 8,25KOHM+-1%TK50 RESISTOR DRALORIC SMA0207/8,25K-F-D	RL 083.1239	300.6018
R10	RL 0,35W 562 OHM+-1%TK50 RESISTOR DRALORIC SMA0207/562OHM-F-D	RL 083.0461	300.6018
R11	RL 0,35W 5,62KOHM+-1%TK50 RESISTOR DRALORIC SMA0207/5,62K-F-C	RL 082.2190	300.6018
R12	RL 0,35W 5,62KOHM+-1%TK50 RESISTOR DRALORIC SMA0207/5,62K-F-C	RL 082.2190	300.6018

uns alle Rechte vor

Kennzeichen Component No.	Benennung/Beschreibung Designation	Sachnummer Stock No.	enthalten in contained in
R13	RL 0,35W 5,62KOHM+-1%TK50 RESISTOR DRALORIC SMA0207/5,62K-F-C	RL 082.2190	300.6018
R14	RL 0,35W 5,62KOHM+-1%TK50 RESISTOR DRALORIC SMA0207/5,62K-F-C	RL 082.2190	300.6018
R19	RL 0,35W 681 OHM+-1%TK50 RESISTOR DRALORIC SMA0207/681OHM-F-D	RL 083.0490	300.6018
R20	RL 0,35W 10,0KOHM+-1%TK50 RESISTOR DRALORIC SMA0207/10K-F-D	RL 083.1297	300.6018
R21	RL 0,35W 4,75KOHM+-1%TK50 RESISTOR DRALORIC SMA0207/4,75K-F-D	RL 083.1097	300.6018
R22	RL 0,35W 4,75KOHM+-1%TK50 RESISTOR DRALORIC SMA0207/4,75K-F-D	RL 083.1097	300.6018
R23	RL 0,35W 1,50KOHM+-1%TK50 RESISTOR DRALORIC SMA0207/1,50K-F-D	RL 083.0732	300.6018
R24	RL 0,35W 82,5KOHM+-1%TK50 RESISTOR DRALORIC SMA0207/82,5K-F-C	RL 082.2302	300.6018
R25	RL 0,35W 2,74KOHM+-1%TK50 RESISTOR DRALORIC SMA0207/2,74K-F-D	RL 083.0926	300.6018
R26	RL 0,35W 2,74KOHM+-1%TK50 RESISTOR DRALORIC SMA0207/2,74K-F-D	RL 083.0926	300.6018
R27	RL 0,35W 681 OHM+-1%TK50 RESISTOR DRALORIC SMA0207/681OHM-F-D	RL 083.0490	300.6018
R28	RL 0,35W 3,32KOHM+-1%TK50 RESISTOR DRALORIC SMA0207/3,32K-F-D	RL 083.0990	300.6018
R29	RL 0,35W 10,0 OHM+-1%TK50 RESISTOR DRALORIC SMA0207/100HM-F-D	RL 082.8852	300.6018
R30	RL 0,35W 3,32KOHM+-1%TK50 RESISTOR DRALORIC SMA0207/3,32K-F-D	RL 083.0990	300.6018
R31	RL 0,35W 3,32KOHM+-1%TK50 RESISTOR DRALORIC SMA0207/3,32K-F-D	RL 083.0990	300.6018
R32	RL 0,35W 68,1 OHM+-1%TK50 RESISTOR DRALORIC SMA0207/68,10HM-F-D	RL 082.9636	300.6018
R33	RL 0,35W 68,1 OHM+-1%TK50 RESISTOR DRALORIC SMA0207/68,10HM-F-D	RL 082.9636	300.6018
R34	RL 0,35W 4,75KOHM+-1%TK50 RESISTOR DRALORIC SMA0207/4,75K-F-D	RL 083.1097	300.6018
R35	RL 0,35W 27,4KOHM+-1%TK50 RESISTOR DRALORIC SMA 0207/27,4K-F-C	RL 082.2583	300.6018

Für diese Unterlage behalten wir uns alle Rechte vor

Kennzeichen Component No.	Benennung/Beschreibung Designation	Sachnummer Stock No.	enthalten in contained in
R36	RL 0,35W 2,74KOHM+-1%TK50 RESISTOR DRALORIC SMA0207/2,74K-F-D	RL 083.0926	300.6018
R37	RL 0,35W 82,5 OHM+-1%TK50 RESISTOR DRALORIC SMA0207/82,50HM-F-D	RL 082.9707	300.6018
R38	RL 0,35W 2,21KOHM+-1%TK50 RESISTOR DRALORIC SMA 0207/2,21K-F-C	RL 082.2477	300.6018
R45	RL 0,35W 100 OHM+-1%TK50 DEPOS.-CARBON RESISTOR DRALORIC SMA0207/100/HM-F-D	RL 082.6543	300.6018
R46	RL 0,35W 1KOHM+-1%TK50 RESISTOR DRALORIC SMA0207/1K-F-C	RL 082.2160	300.6018
R47	RL 0,35W 1,50KOHM+-1%TK50 RESISTOR DRALORIC SMA0207/1,50K-F-D	RL 083.0732	300.6018
R48	RL 0,35W 1,21KOHM+-1%TK50 RESISTOR DRALORIC SMA0207/1,21K-F-D	RL 083.0655	300.6018
R49	RL 0,35W 1,21KOHM+-1%TK50 RESISTOR DRALORIC SMA0207/1,21K-F-D	RL 083.0655	300.6018
R50	RL 0,35W 274 OHM+-1%TK50 RESISTOR DRALORIC SMA0207/2740HM-F-D	RL 083.0178	300.6018
R51	RL 0,35W 47,5 OHM+-1%TK50 RESISTOR DRALORIC SMA0207/47,50HM-F-D	RL 082.9507	300.6018
R52	RL 0,35W 4,75KOHM+-1%TK50 RESISTOR DRALORIC SMA0207/4,75K-F-D	RL 083.1097	300.6018
R53	RL 0,35W 3,92KOHM+-1%TK50 RESISTOR RESISTA MK2	RL 083.1039	300.6018
R54	RL 0,35W 33,2 OHM+-1%TK50 RESISTOR DRALORIC SMA0207/33,20HM-F-D	RL 082.9359	300.6018
R58	RL 0,21W 470 OHM2% UNGEW. RESISTOR RESISTA MK1 4700HM 2% UNGEW.	RL 092.6030	300.6018
R59	RL 0,35W 475 OHM+-1%TK50 RESISTOR DRALORIC SMA0207/4750HM-F-D	RL 083.0390	300.6018
R60	RL 0,21W 470 OHM2% UNGEW. RESISTOR RESISTA MK1 4700HM 2% UNGEW.	RL 092.6030	300.6018
R61	RL 0,35W 475 OHM+-1%TK50 RESISTOR DRALORIC SMA0207/4750HM-F-D	RL 083.0390	300.6018
R62	RL 0,21W 220 OHM2% UNGEW. RESISTOR RESISTA MK1 2200HM 2% UNGEW.	RL 092.5991	300.6018
R63	RL 0,21W 22 OHM2% UNGEW. RESISTOR RESISTA MK1 220HM 2% UNGEW.	RL 092.5879	300.6018

Kennzeichen Component No.	Benennung/Beschreibung Designation	Sachnummer Stock No.	enthalten in contained in
R64	RL 0,21W 220 OHM2% UNGEW. RESISTOR RESISTA MK1 220OHM 2% UNGEW.	RL 092.5991	300.6018
R65	RL 0,35W 475 OHM+-1%TK50 RESISTOR DRALORIC SMA0207/475OHM-F-D	RL 083.0390	300.6018
R68	RL 0,35W 681 OHM+-1%TK50 RESISTOR DRALORIC SMA0207/6810HM-F-D	RL 083.0490	300.6018
R69	RL 0,35W 681 OHM+-1%TK50 RESISTOR DRALORIC SMA0207/6810HM-F-D	RL 083.0490	300.6018
R70	RL 0,21W 47 OHM2% UNGEW. RESISTOR RESISTA MK1 470HM 2% UNGEW.	RL 092.5910	300.6018
R71	RL 0,21W 100 OHM2% UNGEW. RESISTOR RESISTA MK1 1000HM 2% UNGEW.	RL 092.5956	300.6018
R72	RL 0,21W 82 OHM2% UNGEW. RESISTOR RESISTA MK1 820HM 2% UNGEW.	RL 092.5940	300.6018
R73	RL 0,21W 180 OHM2% UNGEW. RESISTOR RESISTA MK1 1800HM 2% UNGEW.	RL 092.5985	300.6018
R74	RL 0,35W 47,5 OHM+-1%TK50 RESISTOR DRALORIC SMA0207/47,50HM-F-D	RL 082.9507	300.6018
R75	RL 0,35W 100 OHM+-1%TK50 DEPOS.-CARBON RESISTOR DRALORIC SMA0207/100/HM-F-D	RL 082.6543	300.6018
R76	RL 0,35W 47,5 OHM+-1%TK50 RESISTOR DRALORIC SMA0207/47,50HM-F-D	RL 082.9507	300.6018
R77	RL 0,35W 100 OHM+-1%TK50 DEPOS.-CARBON RESISTOR DRALORIC SMA0207/100/HM-F-D	RL 082.6543	300.6018
R78	RL 0,21W 220 OHM2% UNGEW. RESISTOR RESISTA MK1 220OHM 2% UNGEW.	RL 092.5991	300.6018
R79	RL 0,21W 68 OHM2% UNGEW. RESISTOR RESISTA MK1 680HM 2% UNGEW.	RL 092.5933	300.6018
R80	RL 0,35W 1KOHM+-1%TK50 RESISTOR DRALORIC SMA0207/1K-F-C	RL 082.2160	300.6018
R81	RL 0,35W 1KOHM+-1%TK50 RESISTOR DRALORIC SMA0207/1K-F-C	RL 082.2160	300.6018
R82	RL 0,35W 1KOHM+-1%TK50 RESISTOR DRALORIC SMA0207/1K-F-C	RL 082.2160	300.6018
R83	RL 0,35W 1KOHM+-1%TK50 RESISTOR DRALORIC SMA0207/1K-F-C	RL 082.2160	300.6018
R84	RL 0,21W 56 OHM2% UNGEW. RESISTOR RESISTA MK1 560HM 2% UNGEW.	RL 092.5927	300.6018

Für diese Unterlage behalten wir uns alle Rechte vor

Kennzeichen Component No.	Benennung/Beschreibung Designation	Sachnummer Stock No.	enthalten in contained in
R85	RL 0,21W 100 OHM2% UNGEW. RESISTOR RESISTA MK1 100OHM 2% UNGEW.	RL 092.5956	300.6018
R86	RL 0,21W 22 OHM2% UNGEW. RESISTOR RESISTA MK1 22OHM 2% UNGEW.	RL 092.5879	300.6018
R87	RL 0,35W 3,32KOHM+-1%TK50 RESISTOR DRALORIC SMA0207/3,32K-F-D	RL 083.0990	300.6018
R88	RL 0,35W 1,50KOHM+-1%TK50 RESISTOR DRALORIC SMA0207/1,50K-F-D	RL 083.0732	300.6018
R89	RL 0,35W 10,0KOHM+-1%TK50 RESISTOR DRALORIC SMA0207/10K-F-D	RL 083.1297	300.6018
R90	RL 0,35W 10,0KOHM+-1%TK50 RESISTOR DRALORIC SMA0207/10K-F-D	RL 083.1297	300.6018
R91	RL 0,35W 6,81KOHM+-1%TK50 RESISTOR DRALORIC SMA 0207/6,81K-F-C	RL 082.2560	300.6018
R92	RL 0,35W 121KOHM+-1%TK50 RESISTOR DRALORIC SMA/207/121K-F-C	RL 083.2070	300.6018
R93	RL 0,35W 121KOHM+-1%TK50 RESISTOR DRALORIC SMA/207/121K-F-C	RL 083.2070	300.6018
R94	RL 0,35W 1KOHM+-1%TK50 RESISTOR DRALORIC SMA0207/1K-F-C	RL 082.2160	300.6018
R95	RL 0,35W 681 OHM+-1%TK50 RESISTOR DRALORIC SMA0207/6810HM-F-D	RL 083.0490	300.6018
R96	RL 0,35W 1,82KOHM+-1%TK50 RESISTOR DRALORIC SMA0207/1,82K-F-C	RL 082.2277	300.6018
R97	RL 0,35W 1,50KOHM+-1%TK50 RESISTOR DRALORIC SMA0207/1,50K-F-D	RL 083.0732	300.6018
R98	RL 0,35W 1KOHM+-1%TK50 RESISTOR DRALORIC SMA0207/1K-F-C	RL 082.2160	300.6018
R99	RL 0,35W 1KOHM+-1%TK50 RESISTOR DRALORIC SMA0207/1K-F-C	RL 082.2160	300.6018
R101	RL 0,35W 221 OHM+-1%TK50 RESISTOR DRALORIC SMA0207/2210HM-F-D	RL 083.0084	300.5157
R102	RL 0,35W 221 OHM+-1%TK50 RESISTOR DRALORIC SMA0207/2210HM-F-D	RL 083.0084	300.5157
R200	RL 0,35W 121 OHM+-1%TK50 RESISTOR DRALORIC SMA0207/1210HM-F-D	RL 082.9859	300.6018
R201	RL 0,35W 182 OHM+-1%TK50 RESISTOR DRALORIC SMA0207/1820HM-F-D	RL 083.0010	300.6018

Kennzeichen Component No.	Benennung/Beschreibung Designation	Sachnummer Stock No.	enthalten in contained in
R202	RL 0,35W 68,1 OHM+-1%TK50 RESISTOR DRALORIC SMA0207/68,1OHM-F-D	RL 082.9636	300.6018
R203	RL 0,35W 100KOHM+-1%TK50 RESISTOR DRALORIC SMA0207/100K-F-C	RL 082.1764	300.6018
R204	RL 0,35W 4,75KOHM+-1%TK50 RESISTOR DRALORIC SMA0207/4,75K-F-D	RL 083.1097	300.6018
R205	RL 0,35W 100 OHM+-1%TK50 DEPOS.-CARBON RESISTOR DRALORIC SMA0207/100/HM-F-D	RL 082.6543	300.6018
R206	RL 0,35W22,10 OHM+-1%TK50 RESISTOR DRALORIC SMA0207/22,1OHM-F-D	RL 082.9188	300.6018
R207	RL 0,35W 475 OHM+-1%TK50 RESISTOR DRALORIC SMA0207/4750HM-F-D	RL 083.0390	300.6018
R208	RL 0,35W 681 OHM+-1%TK50 RESISTOR DRALORIC SMA0207/6810HM-F-D	RL 083.0490	300.6018
R209	RL 0,35W 10,0 OHM+-1%TK50 RESISTOR DRALORIC SMA0207/100HM-F-D	RL 082.8852	300.6018
R210	RL 0,35W 10,0KOHM+-1%TK50 RESISTOR DRALORIC SMA0207/10K-F-D	RL 083.1297	300.6018
R211	RL 0,35W 4,75KOHM+-1%TK50 RESISTOR DRALORIC SMA0207/4,75K-F-D	RL 083.1097	300.6018
R212	RL 0,35W 4,75KOHM+-1%TK50 RESISTOR DRALORIC SMA0207/4,75K-F-D	RL 083.1097	300.6018
R213	RL 0,35W 4,75KOHM+-1%TK50 RESISTOR DRALORIC SMA0207/4,75K-F-D	RL 083.1097	300.6018
R214	RL 0,35W 4,75KOHM+-1%TK50 RESISTOR DRALORIC SMA0207/4,75K-F-D	RL 083.1097	300.6018
R215	RL 0,35W 274 KOHM+-1%TK50 RESISTOR DRALORIC SMA/207/274K-F-C	RL 083.2364	300.6018
R216	RL 0,35W 150 OHM+-1%TK50 RESISTOR DRALORIC SMA0207/1500HM-F-D	RL 082.9942	300.6018
R217	RL 0,35W 150 OHM+-1%TK50 RESISTOR DRALORIC SMA0207/1500HM-F-D	RL 082.9942	300.6018
R218	RL 0,35W 1KOHM+-1%TK50 RESISTOR DRALORIC SMA0207/1K-F-C	RL 082.2160	300.6018
R219	RL 0,35W 6,81KOHM+-1%TK50 RESISTOR DRALORIC SMA 0207/6,81K-F-C	RL 082.2560	300.6018
R220	RL 0,35W 4,75KOHM+-1%TK50 RESISTOR DRALORIC SMA0207/4,75K-F-D	RL 083.1097	300.6018

Für diese Unterlage behalten wir uns alle Rechte vor

Kennzeichen Component No.	Benennung/Beschreibung Designation	Sachnummer Stock No.	enthalten in contained in
R221	RL 0,35W 4,75KOHM+-1%TK50 RESISTOR DRALORIC SMA0207/4,75K-F-D	RL 083.1097	300.6018
R225	RL 0,35W 100KOHM+-1%TK50 RESISTOR DRALORIC SMA0207/100K-F-C	RL 082.1764	300.6018
ST1	FP EINZELKONTAKTSTIFT SINGLE-CONTACT PIN ULMIC R&S.ZCHNG.300.8804	300.8804	300.5170
BIS/TO ST7			
ST10	FP EINZELKONTAKTSTIFT SINGLE-CONTACT PIN ULMIC R&S.ZCHNG.300.8804	300.8804	300.5170
BIS/TO ST15			
ST100	ENTHALTEN IN/INCLUDED IN LEITERPLATTE/PCB		300.5170
ST103	FJ EINBAUWINKELST. SMC ANGLE CONNECTOR RADIALL R 112 669	FJ 249.9684	300.6018
ST104	FJ EINBAUWINKELST. SMC ANGLE CONNECTOR RADIALL R 112 669	FJ 249.9684	300.6018
ST105	FJ EINBAUWINKELST. SMC ANGLE CONNECTOR RADIALL R 112 669	FJ 249.9684	300.6018
T1	AK BCY79IX PNP 45V 200MA TRANSISTOR SIEMENS BCY79IX	AK 010.3777	300.6018
T2	AK BCY79IX PNP 45V 200MA TRANSISTOR SIEMENS BCY79IX	AK 010.3777	300.6018
T3	AK BCY59IX NPN 45V 200MA TRANSISTOR SIEMENS BCY59IX	AK 010.5163	300.6018
T4	AK 2N4033 PNP 80V1000MA TRANSISTOR VALVO 2N4033	AK 083.6460	300.6018
T5	AK 2N2219A NPN 40V 800MA TRANSISTOR VALVO 2N2219A	AK 083.6953	300.6018
T6	AK BCY59IX NPN 45V 200MA TRANSISTOR SIEMENS BCY59IX	AK 010.5163	300.6018
T7	AK BCY79IX PNP 45V 200MA TRANSISTOR SIEMENS BCY79IX	AK 010.3777	300.6018
T8	AK BCY59IX NPN 45V 200MA TRANSISTOR SIEMENS BCY59IX	AK 010.5163	300.6018
T9	AK BCY59IX NPN 45V 200MA TRANSISTOR SIEMENS BCY59IX	AK 010.5163	300.6018

Kennzeichen Component No.	Benennung/Beschreibung Designation	Sachnummer Stock No.	enthalten in contained in
T10	AK BCY79IX PNP 45V 200MA TRANSISTOR SIEMENS BCY79IX	AK 010.3777	300.6018
T11	AK BSY52 NPN 25V 500MA TRANSISTOR INTERMETAL BSY52	AK 010.5005	300.6018
T12	AK BCY59IX NPN 45V 200MA TRANSISTOR SIEMENS BCY59IX	AK 010.5163	300.6018
T15	AK BFR15A NPN 12V >4GHZ TRANSISTOR SIEMENS BFR15A	AK 451.4320	300.6018
T16	AK BCY59IX NPN 45V 200MA TRANSISTOR SIEMENS BCY59IX	AK 010.5163	300.6018
T17	AK BSX29 PNP 12V 200MA TRANSISTOR SGS BSX29	AK 010.3031	300.6018
T18	AK BSX29 PNP 12V 200MA TRANSISTOR SGS BSX29	AK 010.3031	300.6018
T19	AK BSX29 PNP 12V 200MA TRANSISTOR SGS BSX29	AK 010.3031	300.6018
T20	AK BSX29 PNP 12V 200MA TRANSISTOR SGS BSX29	AK 010.3031	300.6018
T21	AK BSX26 NPN 15V 500MA TRANSISTOR SGS BSX26	AK 010.4667	300.6018
T22	AK 2N2219A NPN 40V 800MA TRANSISTOR VALVO 2N2219A	AK 083.6953	300.6018
T23	AK 2N4033 PNP 80V1000MA TRANSISTOR VALVO 2N4033	AK 083.6460	300.6018
T24	AK BCY59IX NPN 45V 200MA TRANSISTOR SIEMENS BCY59IX	AK 010.5163	300.6018
T25	AK BCY79IX PNP 45V 200MA TRANSISTOR SIEMENS BCY79IX	AK 010.3777	300.6018
T26	AK BCY59IX NPN 45V 200MA TRANSISTOR SIEMENS BCY59IX	AK 010.5163	300.6018
T101	AK BFT66 NPN 15V >3GHZ TRANSISTOR SIEMENS BFT66	AK 252.5728	300.5157
T102	AK 2N3866 NPN 30V 400MA TRANSISTOR RCA 2N3866	AK 010.0926	300.5157
			- ENDE -

Für diese Unterlage behalten wir uns alle Rechte vor

(Platte) Pufferoszillator 300.5157
(PCB) Buffer oscillator

240-247 MHz

(Platte) Pufferregelung 300.6018
(PCB) Buffer control

(Platte) Zuf. SMPC-Puffer 300.5170
(PCB) Feed SMPC buffer

Stromlauf zu
SMPC-Puffer / SMPC buffer

Zeichn.-Nr. 300.3219S
Zeichn. Nr. 300.3219 S
300.1000V
300.1000

Änd. zust.	Änd. Mitlfg Nr.	Datum	Name
A	27860	9.82	GS
B	29709	2.83	GS
C	30063	4.83	gs
D	30455	8.83	gs
E	31341	7.84	GS
F	32288	5.85	Gs
G	32942	10.85	Ho

IKEA Datum Name
gezeichnet 21.4.82 gu
bearbeitet 20.4.82 ls
geprüft
normgep.

Diese Zeichnung ist unser Eigentum. Vervielfältigung, unbefugte Verwertung, Mitteilung an andere ist strafbar und schadenersatzpflichtig.

ROHDE & SCHWARZ · MÜNCHEN

PF 095 3525

Draufsicht Top view
B10 (MCL)
B13
B1,B4,B5,B6,B9 B11,B14,B15
B2,B3,B7,B8,B12

T1-T12 T15-T26 T102
T101

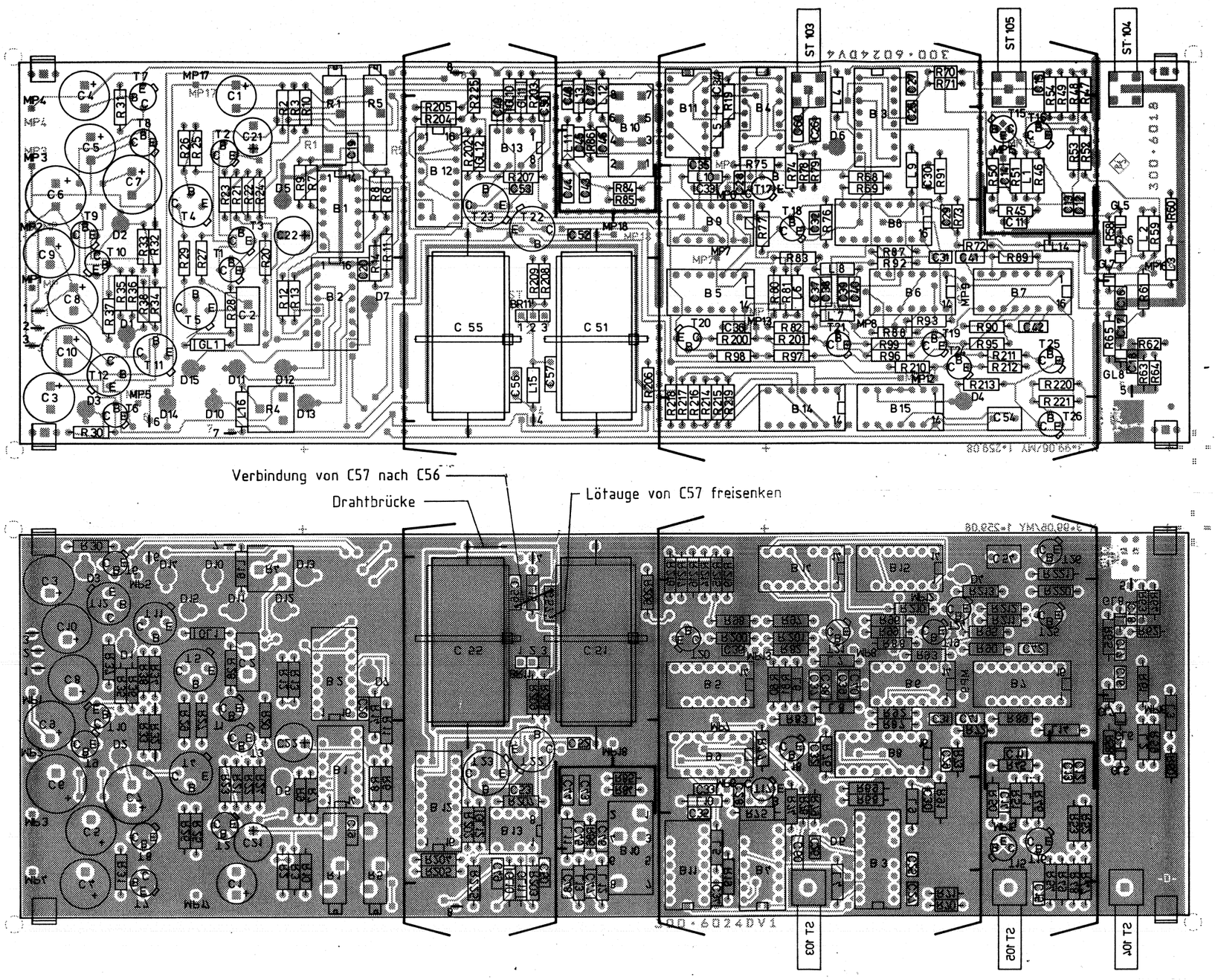

Ansicht und Leitungsführung Bauteilseite
View of tracks on component side

Ansicht und Leitungsführung Lötseite
View of tracks on solder side

J	30063	4.83	GS	Maße ohne Toleranzangabe		Maßstab 1 : 1
K	30455	9.83	gs			Halbzeug, Werkstoff
L	31341	6.84	GS			
M	32288	9.84	GS	1GMC	Tag / Name	Benennung: Pufferregelung
				Bearb	4.83 GS	Z
				Gepr		
				Norm		
				ROHDE & SCHWARZ		Zeichn.-Nr 300.6018
						Blatt-Nr 2
And. Zust.	Änderungs-Mitteilung	Tag	Name	zu Gerät SMPC		reg. i. V. 300.1000V erste Z 300.3219

Für diese Unterlage behalten wir uns alle Rechte vor.

ISO-Projektion
Methode E

Ansicht und Leitungsführung Bauteilseite
View of tracks on component side

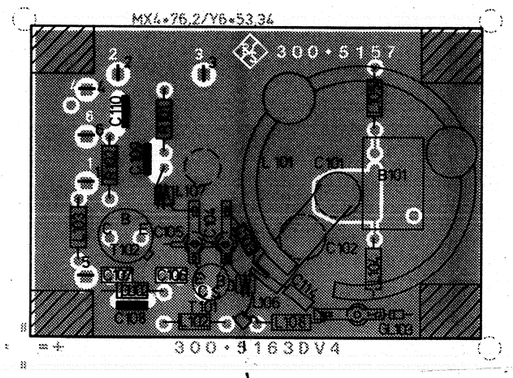

C106

Ansicht und Leitungsführung Lötseite
View of tracks on solder side

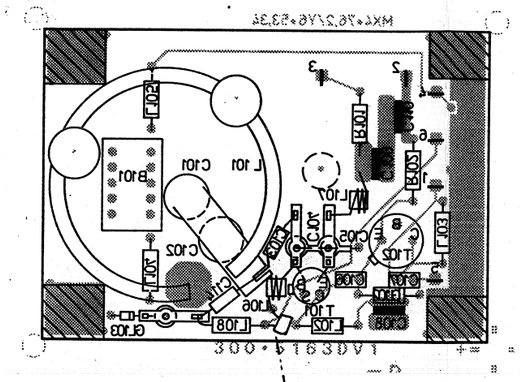

C106

Für diese Zeichnung behalten wir uns alle Rechte vor.

Versorg.-Nr					VG-Sachnr.	
B	—	9.81	WG	Maße ohne Toleranzangabe	Maßstab 1 : 1	
C	32 942	12.85	Ho		Halbzeug, Werkstoff	
				1GMC / Tag / Name	Benennung	
				Bearb 7.10.81 WG	Pufferoszillator Bufferoscillator	Z
				Gepr		
				Norm		
				ROHDE & SCHWARZ MÜNCHEN	Zeichn.-Nr. 300.5157	Blatt-Nr. 2
And. Zust.	Änderungs-Mitteilung	Tag	Name	zu Gerät SMPC	reg. V 300.1000	erste Z 300.3219

095 2493-2 CDD

Ansicht und Leitungsführung Bauteilseite
View of tracks on component side

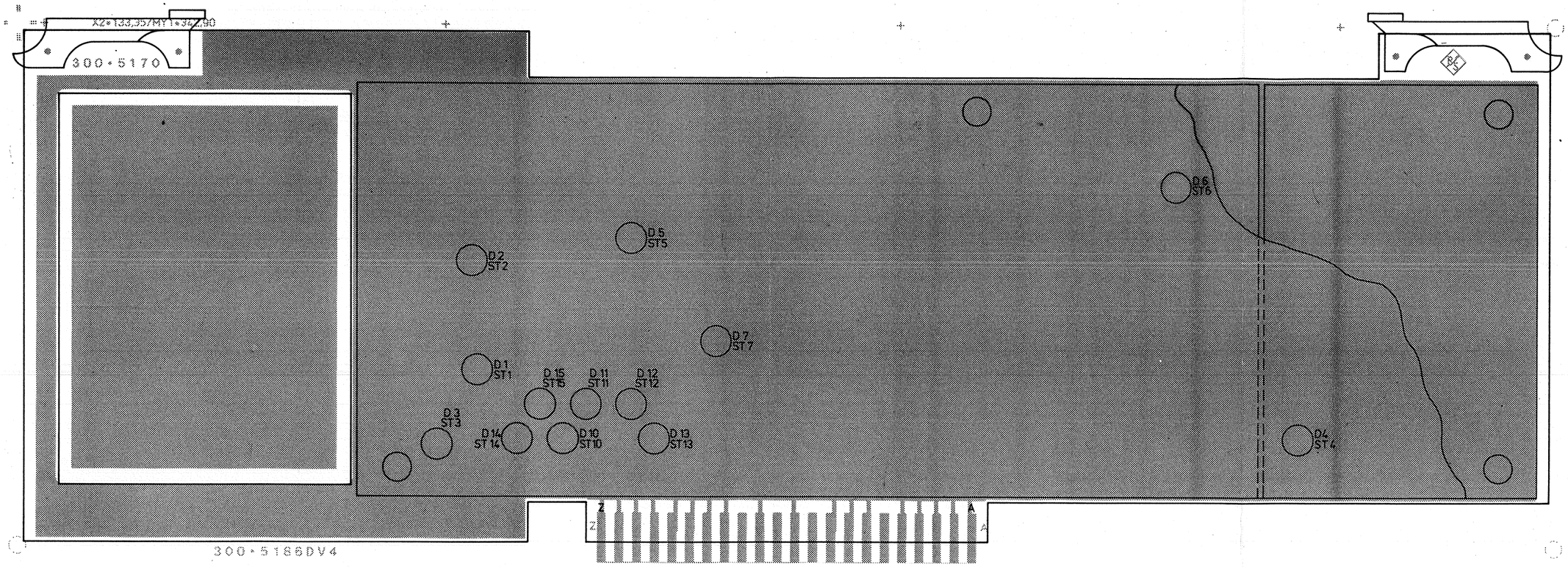

Für diese Unterlage behalten
wir uns alle Rechte vor

ISO-Projektion
Methode E

C		28.1.82	WG
And Zust	Änderungs-Mitteilung	Tag	Name

Maße ohne Toleranzangabe

Maßstab 1 : 1

Halbzeug, Werkstoff

1GMC	Tag	Name
Bearb	28.1.82	WG
Gepr		
Norm		

Benennung
Zuführ. SMPC - Puffer
Feed SMPC-Buffer

Z

ROHDE & SCHWARZ

Zeichn.-Nr. 300.5170

Blatt-Nr. 2 v. Bl

zu Gerat SMPC

reg. V 300.1000V

erste Z 300.3219

PF 095 2493.0781

07 6001 81

Ansicht und Leitungsführung Lötseite
View of tracks on solder side

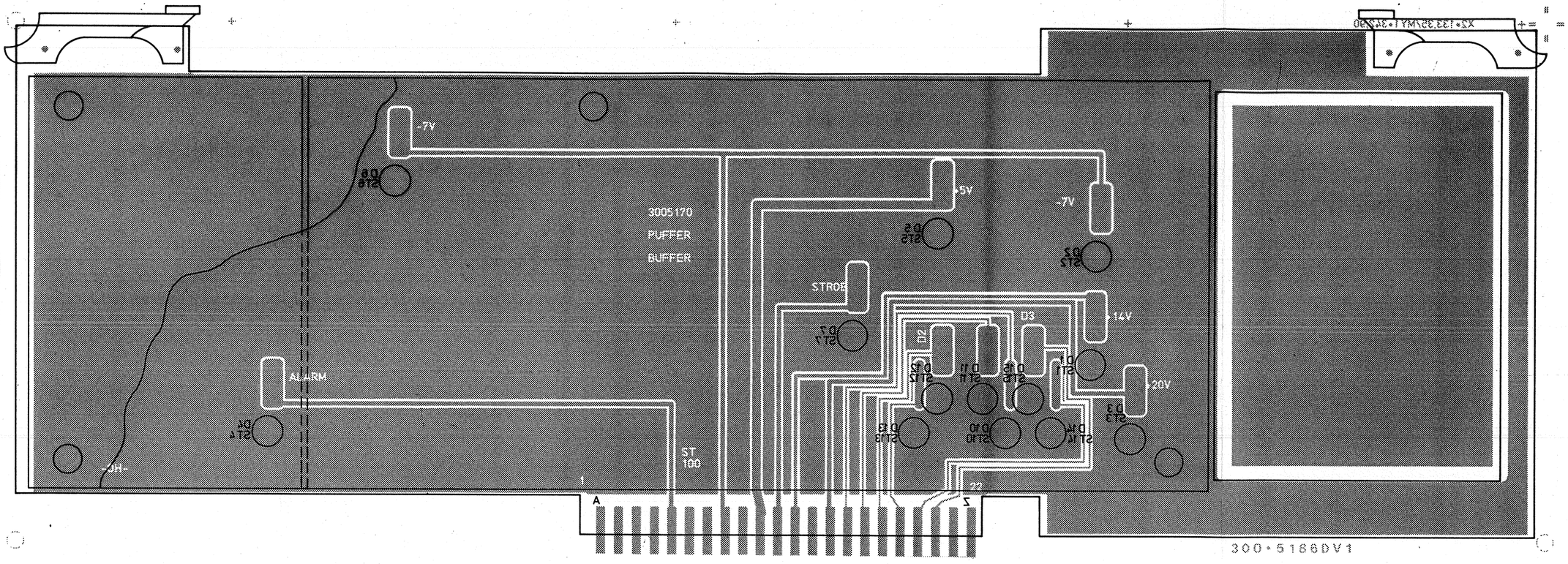

Für diese Unterlage behalten wir uns alle Rechte vor.

C		28.1.82	WG	Maße ohne Toleranzangabe	Maßstab 1 : 1	
					Halbzeug, Werkstoff	
				1GMC / Tag / Name	Benennung	Z
				Bearb 28.1.82 WG	Zuführ. SMPC-Puffer Feed SMPC-Buffer	
				Gepr.		
				Norm		
And Zust	Anderungs Mitteilung	Tag	Name	ROHDE & SCHWARZ	Zeichn.-Nr 300.5170	Blatt-Nr 3
				zu Gerat SMPC	reg. v 300.1000V erste Z 300.3219	v Bl

ISO-Projektion Methode E

ROHDE&SCHWARZ

SERVICE INSTRUCTIONS FOR

Output Oscillator I

300.3719 (Y8)

Table of Contents

		Page
5	Service Instructions for Output Oscillator I 300.3719 (Y8)	5.1
5.1	Circuit Description	5.1
5.1.1	Oscillators	5.1
5.1.2	Output Amplifier	5.1
5.1.3	Control-voltage Amplifier	5.1
5.2	Checking and Adjustment Procedures	5.2
5.2.1	Adjusting the Oscillators	5.2
5.3	Troubleshooting	5.3
5.3.1	Output Amplifier	5.3
5.3.2	Oscillators	5.3
5.3.3	Control-voltage Amplifier	5.3
5.3.4	Interfaces	5.4

Parts list
Circuit diagram
Components location plans

5 Service Instructions for Output Oscillator I 300.3719 (Y8)

5.1 Circuit Description

(See circuit diagram 300.3719 S and Fig. 5-1)

Y8 supplies the upper frequency octave of the XPC/SMPC from 680 to 1360 MHz. This range is split up among three oscillators:

Range in MHz	Designation in block diagram	Designation in circuit diagram
680 to 912	Osc. 1	T1
912 to 1144	Osc. 2	T6
1144 to 1360	Osc. 3	T10

The output power of the oscillators is applied via the output amplifier and three power dividers to Y9, Y10 and Y11 with the aid of PIN diode switches.

5.1.1 Oscillators

The three oscillators are of the negative-impedance type. The negative impedance at the base of the oscillator transistor reduces the damping of a resonant circuit. Two push-pull-connected varicaps are used for tuning. The oscillator transistor is energized from a constant current source whose current determines the output power of the oscillator. A two-transistor switching stage driven with TTL level switches the supply voltage of -14 V for the oscillator transistor and the PIN diode switch.

5.1.2 Output Amplifier

The output amplifier (T18, T19) boosts the output power of the oscillators from 0 to 10 dBm. At the same time, it isolates the oscillators from the connected pcb's.

5.1.3 Control-voltage Amplifier

The control voltage from the phase-lock loop is applied to two complementary emitter followers (T13 to T16) via three adjustable voltage dividers which are selected with the aid of FET switches (T20 to T22). The relay RS1 is used for switching over the control bandwidth of the phase-lock loop (only SMPC).

5.2.1 Adjusting the Oscillators

Minimum and maximum output frequency as well as output power can be adjusted separately for each oscillator.

Setup on Y8:

- Connect DC power supply (0 to 20 V) to ST114.
- Connect power meter (max. 1.5 GHz) to ST112.
- Connect spectrum analyzer (max. 1.5 GHz) to ST111.
- Connect frequency counter (max. 1.5 GHz) to ST113.

Switch on XPC/SMPC and set frequency to 750 MHz. This switches on the 1st oscillator (T1) of the output oscillator III. A TTL H signal can be fed into ST110.4 instead.

Feed DC voltage of 2 ±0.01 V into ST114. Vary C1 until a frequency of 676.6 ±0.5 MHz is obtained on the frequency counter. Then increase tuning voltage to 15 ±0.01 V and adjust 903.8 ±0.5 MHz by means of R47.

Repeat this adjustment alternately until the upper and the lower frequency limits are observed.

Now gradually increase tuning voltage from 1 to 17 V and check the output power by means of the power meter. At the frequency at which maximum power is obtained, set -2.5 dBm by means of R11. Then check whether the output power is between -2.5 and -4.5 over the entire frequency range.

Finally, check on the spectrum analyzer whether the oscillator operates without sidebands, noise increases or frequency jumps over the entire frequency range.

Similarly adjust the other two oscillators.

2nd oscillator (T6):	XPC/SMPC:	1000 MHz
	C12:	907.7 ±0.5 MHz
	R48:	1135.3 ±0.5 MHz
	R17:	adjust output power.
3rd oscillator (T10):	XPC/SMPC:	1250 MHz
	C23:	1140.4 ±0.5 MHz
	R49:	1367.8 ±0.5 MHz
	R28:	adjust output power.

5.3 Troubleshooting

Troubleshooting on the Y8 is simple with the aid of the specified DC and RF levels.

5.3.1 Output Amplifier

Collector T18: 8.8 ±0.5 V
Gain: 10 dB
Output power: 10 dBm

5.3.2 Oscillators

A voltage of -13.8 ±0.2 V must be present at the collector of T3, T7 and T11 when switching on the respective oscillators.

The voltage drop at R5 is 1 to 1.5 V, at R16 1 to 1.5 V and at R27 0.75 to 1.25 V.

The RF power coupled out at R34 should be 0 ±1 dBm (use 500-Ω probe for measurement).

5.3.3 Control-voltage Amplifier

The DC offset between the base of T14 and the emitter of T15 must be ≤ 100 mV.

If a voltage of 17 V is applied to ST114 all three voltage dividers, R47, R48 and R49 must be adjustable so as to obtain between 14.5 ±0.2 V and 17 -0.2 V.

5.3.4 Interfaces

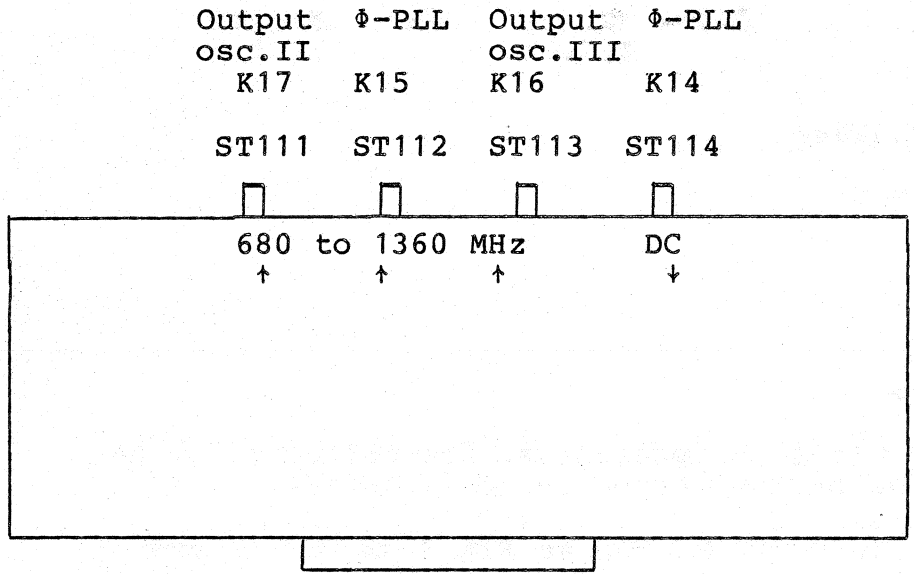

ST/BU	111	112	113	114
f		680 to 1360 MHz		DC-AF
Level	-3 ±2 dBm	-2.5 to 4.5 dBm	-10 ±2 dBm	1 to 17 V
Z	50 Ω	50 Ω	50 Ω	12 kΩ
AC-DC	DC	DC	DC	DC
Shape of curve	sinusoidal	sinussoidal	sinusoidal	

Digital Interface

4 data lines from output oscillator III

	L	H
ST110.4	Oscillator 1 off	Oscillator 1 on
ST110.3	Oscillator 2 off	Oscillator 2 on
ST110.2	Oscillator 3 off	Oscillator 3 on
ST110.5	Narrow control bandwidth	Wide control bandwidth

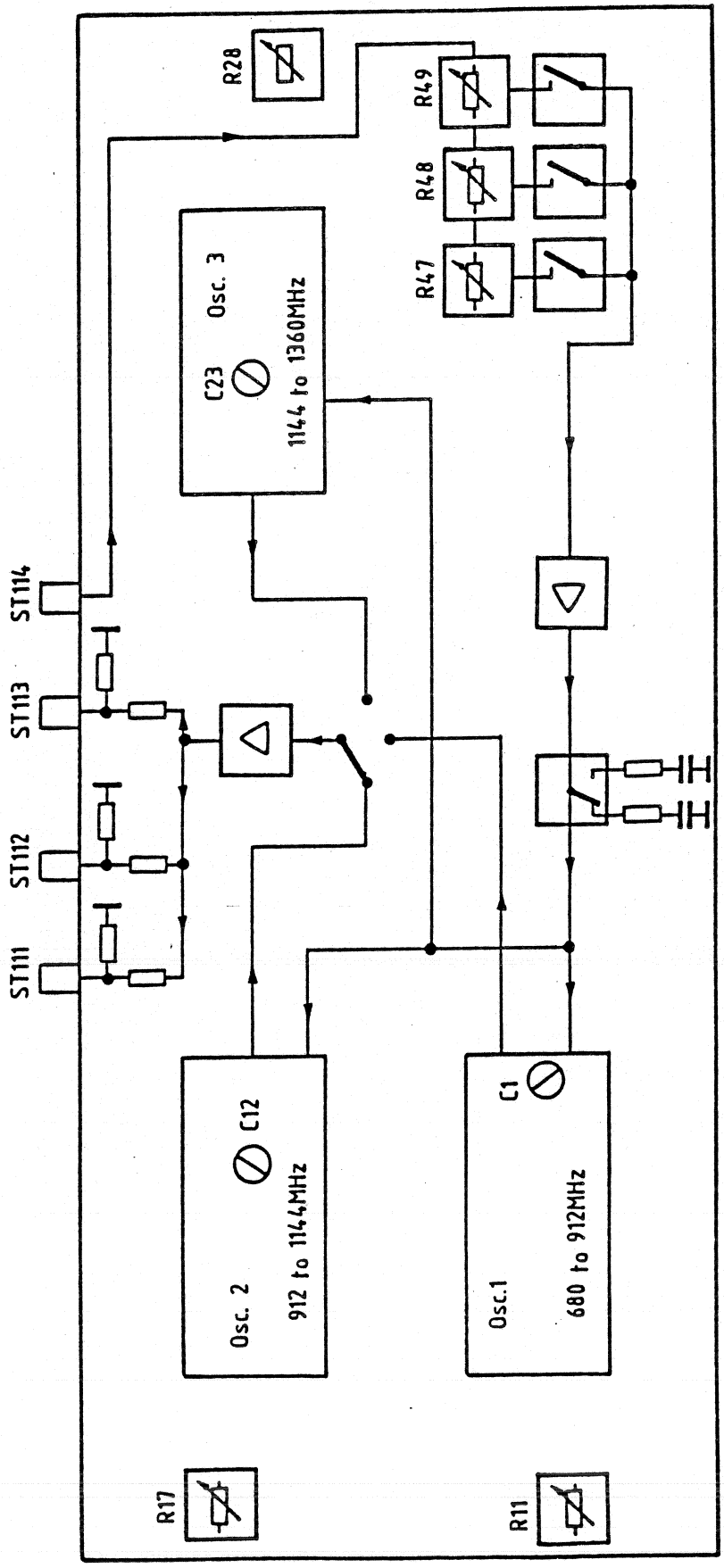

Fig. 5-1 Block diagram of the output oscillator I

ROHDE & SCHWARZ
MÜNCHEN

Schaltteillisten
Stromläufe
Bestückungspläne

Parts lists
Circuit diagrams
Components plans

R 29500 Bl. 2

Kennzeichen Component No.	Benennung/Beschreibung Designation	Sachnummer Stock No.	enthalten in contained in
BU1	FP BUCHSE VERTIKAL P.V.1P SOCKET BERG 75377-001	FP 278.5577	300.5270
BIS/TO BU8			
C1	CT 9,2PF TAUCHTR.RD 7X12 AIR-TYPE TRIMMER TEKELEC LUFTTRAT5200	CT 025.7367	300.5270
C2	CC 22PF+-10% N750 TRAP CAPACITOR STETTNER TEFK7/2210%N750	CC 083.6724	300.5270
C3	CC 3,8PF+-0,25PF50V2NP0 CAPACITOR VITRAMON VJ0805A3R8CFA	CC 093.5620	300.5270
C4	CC 4,3PF+-0,25PF50V2NP0 CAPACITOR VITRAMON VJ0805A4R3CFA	CC 093.5643	300.5270
C5	CC 12PF+-5%100V NP0 VS.C CERAMIC CAPACITOR VITRAMON VJ0805A120JFA	CC 022.3948	300.5270
C6	CC 4,3PF+-0,25PF50V2NP0 CAPACITOR VITRAMON VJ0805A4R3CFA	CC 093.5643	300.5270
C7	CC 22PF+-10% N750 TRAP CAPACITOR STETTNER TEFK7/2210%N750	CC 083.6724	300.5270
C8	CC 22PF+-10% N750 TRAP CAPACITOR STETTNER TEFK7/2210%N750	CC 083.6724	300.5270
C9	CC 10NF-20+50%7X8R6000 CAPACITOR VALVO 2222 63051 64051103	CC 087.7525	300.5270
C11	CC 4,7NF+-10%6X9R2000 CAPACITOR VALVO 2222 63051 472	CC 087.7102	300.5270
C12	CT 9,2PF TAUCHTR.RD 7X12 AIR-TYPE TRIMMER TEKELEC LUFTTRAT5200	CT 025.7367	300.5270
C13	CC 22PF+-10% N750 TRAP CAPACITOR STETTNER TEFK7/2210%N750	CC 083.6724	300.5270
C14	CC 12PF+-5%100V NP0 VS.C CERAMIC CAPACITOR VITRAMON VJ0805A120JFA	CC 022.3948	300.5270
C15	CC 2,3PF+-0,25PF50V2NP0 CAPACITOR VITRAMON VJ0805A2R3CFA	CC 093.5566	300.5270
C16	CC 3,8PF+-0,25PF50V2NP0 CAPACITOR VITRAMON VJ0805A3R8CFA	CC 093.5620	300.5270
C17	CC 2,3PF+-0,25PF50V2NP0 CAPACITOR VITRAMON VJ0805A2R3CFA	CC 093.5566	300.5270

Für diese Unterlage behalten wir uns alle Rechte vor

ROHDE&SCHWARZ	ÄZ	Datum Date	Schaltteilliste für Parts list for	Sachnummer Stock No.	Blatt Page
	09	0686	ZE AUSGANGSOZILLATOR I OUTPUT OSCILLATOR I	300.3719.00 SA	2

Kennzeichen Component No.	Benennung/Beschreibung Designation	Sachnummer Stock No.	enthalten in contained in
C18	CC 22PF+-10% N750 TRAP CAPACITOR STETTNER TEFK7/2210%N750	CC 083.6724	300.5270
C19	CC 22PF+-10% N750 TRAP CAPACITOR STETTNER TEFK7/2210%N750	CC 083.6724	300.5270
C20	CC 10NF-20+50%7X8R6000 CAPACITOR VALVO 2222 63051 64051103	CC 087.7525	300.5270
C22	CC 4,7NF+-10%6X9R2000 CAPACITOR VALVO 2222 63051 472	CC 087.7102	300.5270
C23	CT 9,2PF TAUCHTR.RD 7X12 AIR-TYPE TRIMMER TEKELEC LUFTTRAT5200	CT 025.7367	300.5270
C24	CC 22PF+-10% N750 TRAP CAPACITOR STETTNER TEFK7/2210%N750	CC 083.6724	300.5270
C25	CC 1,1PF+-0,1PF 500V 3X3X CAPACITOR ATC ATC 100-B1R1B-P500X	CC 467.8413	300.5270
C26	CC 2,6PF+-0,25PF50V2NPO CAPACITOR VITRAMON VJ0805A2R6CFA	CC 093.5572	300.5270
C27	CC 1,1PF+-0,1PF 500V 3X3X CAPACITOR ATC ATC 100-B1R1B-P500X	CC 467.8413	300.5270
C28	CC 22PF+-10% N750 TRAP CAPACITOR STETTNER TEFK7/2210%N750	CC 083.6724	300.5270
C29	CC 22PF+-10% N750 TRAP CAPACITOR STETTNER TEFK7/2210%N750	CC 083.6724	300.5270
C30	CC 10NF-20+50%7X8R6000 CAPACITOR VALVO 2222 63051 64051103	CC 087.7525	300.5270
C32	CC 12PF+-5%100V NPO VS.C CERAMIC CAPACITOR VITRAMON VJ0805A120JFA	CC 022.3948	300.5270
C33	CC 4,7NF+-10%6X9R2000 CAPACITOR VALVO 2222 63051 472	CC 087.7102	300.5270
C34	CC 10NF+-10% 50V3K1200 CH CAPACITOR VITRAMON VJ1005Y103KFB	CC 082.3344	300.5270
C35	CC 3,2PF+-0,25PF50V2NPO CAPACITOR VITRAMON VJ0805A3R2CFA	CC 093.5595	300.5270
C36	CC 10NF-20+50%7X8R6000 CAPACITOR VALVO 2222 63051 64051103	CC 087.7525	300.5270
C37	CC 10NF-20+50%7X8R6000 CAPACITOR VALVO 2222 63051 64051103	CC 087.7525	300.5270
C38	CC 100PF+-10%100V3NPO CHI CAPACITOR VITRAMON VJ1005A101KFB	CC 082.3109	300.5270

300.3719.00 SA BL 2+

Für diese Unterlage behalten wir uns alle Rechte vor

Kennzeichen Component No.	Benennung/Beschreibung Designation	Sachnummer Stock No.	enthalten in contained in
C40	CC 10NF+-10% 50V3K1200 CH CAPACITOR VITRAMON VJ1005Y103KFB	CC 082.3344	300.5270
C42	CE 47UF-10+50% 40V 9X13 ELECTROLYTIC CAPACITOR ROEDERST EK 00 CB 247 G	CE 006.7142	300.5270
C43	CC 10NF-20+50%7X8R6000 CAPACITOR VALVO 2222 63051 64051103	CC 087.7525	300.5270
C44	CE 47UF-10+50% 40V 9X13 ELECTROLYTIC CAPACITOR ROEDERST EK 00 CB 247 G	CE 006.7142	300.5270
C45	CC 10NF-20+50%7X8R6000 CAPACITOR VALVO 2222 63051 64051103	CC 087.7525	300.5270
C47	CC 4,7NF+-10%100V5K1200VI CERAMIC CAPACITOR UNION CARB CK05BX472K	CC 068.4053	300.5270
C48	CK 150NF+-5%63V5RM MKT CAPACITOR WIMA MKS2/63/0,15UF/5%	CK 099.2946	300.5270
C49	CC 4,7NF+-10%100V5K1200LR CAPACITOR AEROVOX CKR05BX472KLEVELR	CC 092.0619	300.5270
C51	CE 1,0UF+-20%35V 5X 4X 7 ELECTROLYTIC CAPACITOR ERO-TANTAL TA-ELKOETR1-1/35	CE 022.8185	300.5270
C52	CC 10NF-20+50%7X8R6000 CAPACITOR VALVO 2222 63051 64051103	CC 087.7525	300.5270
C53	CE 47UF-10+50% 40V 9X13 ELECTROLYTIC CAPACITOR ROEDERST EK 00 CB 247 G	CE 006.7142	300.5270
C54	CC 10NF-20+50%7X8R6000 CAPACITOR VALVO 2222 63051 64051103	CC 087.7525	300.5270
C55	CE 47UF-10+50% 40V 9X13 ELECTROLYTIC CAPACITOR ROEDERST EK 00 CB 247 G	CE 006.7142	300.5270
C56	CC 120PF+-2%5X6N750 CAPACITOR VALVO 2222 678 58121	CC 087.6912	300.5270
D1	LD 35DB/200M-10GHZ PI-FIL CHOKE ERIE 1214-038	LD 300.6818	300.5292
BIS/TO D8			
GL1	AE BB405B 11/ 2PF CDI TUNING DIODE VALVO BB405B	AE 596.6839	300.5270
GL2	AE BB405B 11/ 2PF CDI TUNING DIODE VALVO BB405B	AE 596.6839	300.5270

Für diese Unterlage behalten wir uns alle Rechte vor

Kennzeichen Component No.	Benennung/Beschreibung Designation	Sachnummer Stock No.	enthalten in contained in
GL3	AD 1N4448 75V 0,15A UDI DIODE VALVO 1N4448	AD 012.0700	300.5270
GL4	AE BA379 PIN DIODE	300.6918	300.5270
GL5	AE BA379 PIN DIODE	300.6918	300.5270
GL6	AE BB405B 11/ 2PF CDI TUNING DIODE VALVO BB405B	AE 596.6839	300.5270
GL7	AE BB405B 11/ 2PF CDI TUNING DIODE VALVO BB405B	AE 596.6839	300.5270
GL8	AD 1N4448 75V 0,15A UDI DIODE VALVO 1N4448	AD 012.0700	300.5270
GL9	AE BA379 PIN DIODE	300.6918	300.5270
GL10	AE BA379 PIN DIODE	300.6918	300.5270
GL11	AE BB405B 11/ 2PF CDI TUNING DIODE VALVO BB405B	AE 596.6839	300.5270
GL12	AE BB405B 11/ 2PF CDI TUNING DIODE VALVO BB405B	AE 596.6839	300.5270
GL13	AD 1N4448 75V 0,15A UDI DIODE VALVO 1N4448	AD 012.0700	300.5270
GL14	AE BA379 PIN DIODE	300.6918	300.5270
GL15	AE BA379 PIN DIODE	300.6918	300.5270
GL16	AD 1N4448 75V 0,15A UDI DIODE VALVO 1N4448	AD 012.0700	300.5270
BIS/TO GL25			
L1	LD 0,22 UH 10% 690 MIA CHOKE DELEVAN	LD 092.3076	300.5270
L2	LD 0,22 UH 10% 690 MIA CHOKE DELEVAN	LD 092.3076	300.5270
L3	LD 0,22 UH 10% 690 MIA CHOKE DELEVAN	LD 092.3076	300.5270
L4	LD SPULE COIL	300.3483	300.5270
BIS/TO L8			
L9	LL SPULE COIL	300.8940	300.5270
L11	LD 0,15 UH 10% 835 MIA CHOKE DELEVAN	LD 092.3053	300.5270

uns alle Rechte vor

Kennzeichen Component No.	Benennung/Beschreibung Designation	Sachnummer Stock No.	enthalten in contained in
L12	LD 0,15 UH 10% 835 MIA CHOKE DELEVAN	LD 092.3053	300.5270
L13	LD 0,15 UH 10% 835 MIA CHOKE DELEVAN	LD 092.3053	300.5270
L14	LD SPULE COIL	300.3483	300.5270
BIS/TO L18			
L19	LL SPULE COIL	300.8991	300.5270
L21	LD 0,10 UH 10% 935 MIA CHOKE DELEVAN DROSSEL0819-00	LD 092.3030	300.5270
L22	LD 0,10 UH 10% 935 MIA CHOKE DELEVAN DROSSEL0819-00	LD 092.3030	300.5270
L23	LD 0,10 UH 10% 935 MIA CHOKE DELEVAN DROSSEL0819-00	LD 092.3030	300.5270
L24	LD SPULE COIL	300.3483	300.5270
BIS/TO L28			
L29	LL SPULE COIL	300.9046	300.5270
L31	LD SPULE COIL	300.3483	300.5270
L32	ENTHALTEN IN/INCLUDED IN LEITERPLATTE / PCB		300.5270
L40	LD 33,0UH10%3,400HM0,130A CHOKE DELEVAN DROSSEL 1025-56	LD 067.3047	300.5270
BIS/TO L43			
R1	RL 0,21W 47 OHM2% UNGEW. RESISTOR RESISTA MK1 470HM 2% UNGEW.	RL 092.5910	300.5270
R2	RL 0,21W 1,0KOHM2% UNGEW. RESISTOR RESISTA MK1 1K 2% UNGEW.	RL 092.6075	300.5270
R3	RL 0,21W 2,67KOHM+-1%TK50 RESISTOR RESISTA MK1 2K67 1% TK50	092.4843	300.5270
R4	RL 0,21W 1,00KOHM+-1%TK50 RESISTOR RESISTA MK1 1K00 1% TK50	RL 092.1444	300.5270
R5	RL 0,21W 56,2 OHM+-1%TK50 RESISTOR RESISTA MK1 56,20HM 1% TK50	RL 092.1280	300.5270
R6	RL 0,21W 562 OHM+-1%TK50 RESISTOR RESISTA MK1 5620HM 1% TK50	RL 092.1415	300.5270

Für diese Unterlage behalten wir uns alle Rechte vor

Kennzeichen Component No.	Benennung/Beschreibung Designation	Sachnummer Stock No.	enthalten in contained in
R7	RL 0,21W 10,0KOHM+-1%TK50 RESISTOR RESISTA MK1 10KO 1% TK50	RL 092.1567	300.5270
R8	RL 0,21W 3,32KOHM+-1%TK50 RESISTOR RESISTA MK1 3K32 1% TK50	RL 092.1509	300.5270
R9	RL 0,21W 820 OHM2% UNGEW. RESISTOR RESISTA MK1 8200HM 2% UNG.	RL 092.6069	300.5270
R10	RL 0,21W 10,0KOHM+-1%TK50 RESISTOR RESISTA MK1 10KO 1% TK50	RL 092.1567	300.5270
R11	RS 0,5W500 OHM+-10%10X10X CERMET POTENTIOMETER T BOURNS 3386F-1-501	RS 247.7878	300.5270
R12	RL 0,21W 47 OHM2% UNGEW. RESISTOR RESISTA MK1 470HM 2% UNGEW.	RL 092.5910	300.5270
R13	RL 0,21W 1,0KOHM2% UNGEW. RESISTOR RESISTA MK1 1K 2% UNGEW.	RL 092.6075	300.5270
R14	RL 0,21W 2,67KOHM+-1%TK50 RESISTOR RESISTA MK1 2K67 1% TK50	092.4843	300.5270
R15	RL 0,21W 1,00KOHM+-1%TK50 RESISTOR RESISTA MK1 1K00 1% TK50	RL 092.1444	300.5270
R16	RL 0,21W 56,2 OHM+-1%TK50 RESISTOR RESISTA MK1 56,20HM 1% TK50	RL 092.1280	300.5270
R17	RS 0,5W500 OHM+-10%10X10X CERMET POTENTIOMETER T BOURNS 3386F-1-501	RS 247.7878	300.5270
R18	RL 0,21W 562 OHM+-1%TK50 RESISTOR RESISTA MK1 5620HM 1% TK50	RL 092.1415	300.5270
R19	RL 0,21W 10,0KOHM+-1%TK50 RESISTOR RESISTA MK1 10KO 1% TK50	RL 092.1567	300.5270
R20	RL 0,21W 3,32KOHM+-1%TK50 RESISTOR RESISTA MK1 3K32 1% TK50	RL 092.1509	300.5270
R21	RL 0,21W 820 OHM2% UNGEW. RESISTOR RESISTA MK1 8200HM 2% UNG.	RL 092.6069	300.5270
R22	RL 0,21W 10,0KOHM+-1%TK50 RESISTOR RESISTA MK1 10KO 1% TK50	RL 092.1567	300.5270
R23	RL 0,21W 47 OHM2% UNGEW. RESISTOR RESISTA MK1 470HM 2% UNGEW.	RL 092.5910	300.5270
R24	RL 0,21W 1,0KOHM2% UNGEW. RESISTOR RESISTA MK1 1K 2% UNGEW.	RL 092.6075	300.5270
R25	RL 0,21W 2,67KOHM+-1%TK50 RESISTOR RESISTA MK1 2K67 1% TK50	092.4843	300.5270

uns alle Rechte vor

Kennzeichen Component No.	Benennung/Beschreibung Designation	Sachnummer Stock No.	enthalten in contained in
R26	RL 0,21W 1,00KOHM+-1%TK50 RESISTOR RESISTA MK1 1K00 1% TK50	RL 092.1444	300.5270
R27	RL 0,21W 56,2 OHM+-1%TK50 RESISTOR RESISTA MK1 56,2OHM 1% TK50	RL 092.1280	300.5270
R28	RS 0,5W500 OHM+-10%10X10X CERMET POTENTIOMETER T BOURNS 3386F-1-501	RS 247.7878	300.5270
R29	RL 0,21W 392 OHM+-1%TK50 RESISTOR RESISTA MK1 392OHM 1% TK50	RL 092.1396	300.5270
R30	RL 0,21W 10,0KOHM+-1%TK50 RESISTOR RESISTA MK1 10K0 1% TK50	RL 092.1567	300.5270
R31	RL 0,21W 3,32KOHM+-1%TK50 RESISTOR RESISTA MK1 3K32 1% TK50	RL 092.1509	300.5270
R32	RL 0,21W 820 OHM2% UNGEW. RESISTOR RESISTA MK1 820OHM 2% UNG.	RL 092.6069	300.5270
R33	RL 0,21W 10,0KOHM+-1%TK50 RESISTOR RESISTA MK1 10K0 1% TK50	RL 092.1567	300.5270
R34	RL 0,21W 820 OHM2% UNGEW. RESISTOR RESISTA MK1 820OHM 2% UNG.	RL 092.6069	300.5270
R35	RG 0,125W 33 OHM+-1% CHIP CHIP RESISTOR MSI WA-4 330HM 1% PG-T	337.8214	300.5270
R36	RL 0,21W 1,50KOHM+-1%TK50 RESISTOR RESISTA MK1 1K5 1% TK50	RL 092.1467	300.5270
R37	RL 0,21W 180 OHM2% UNGEW. RESISTOR RESISTA MK1 180OHM 2% UNGEW.	RL 092.5985	300.5270
R38	RL 0,21W 150 OHM+-1%TK50 RESISTOR RESISTA MK1 150OHM 1% TK50	RL 092.1344	300.5270
R39	RL 0,21W 47,5KOHM+-1%TK50 RESISTOR RESISTA MK1 47K5 1% TK50	RL 092.1644	300.5270
R40	RL 0,21W 68,1KOHM+-1%TK50 RESISTOR RESISTA MK1 68K10 1% TK50	RL 092.1667	300.5270
R41	RL 0,21W 82 OHM2% UNGEW. RESISTOR RESISTA MK1 820HM 2% UNGEW.	RL 092.5940	300.5270
R42	RL 0,21W 68 OHM2% UNGEW. RESISTOR RESISTA MK1 680HM 2% UNGEW.	RL 092.5933	300.5270
R43	RL 0,21W 82 OHM2% UNGEW. RESISTOR RESISTA MK1 820HM 2% UNGEW.	RL 092.5940	300.5270
R44	RL 0,21W 68 OHM2% UNGEW. RESISTOR RESISTA MK1 680HM 2% UNGEW.	RL 092.5933	300.5270

Für diese Unterlage behalten wir uns alle Rechte vor

Kennzeichen Component No.	Benennung/Beschreibung Designation	Sachnummer Stock No.	enthalten in contained in
R45	RL 0,21W 180 OHM2% UNGEW. RESISTOR RESISTA MK1 180OHM 2% UNGEW.	RL 092.5985	300.5270
R46	RL 0,21W 56 OHM2% UNGEW. RESISTOR RESISTA MK1 56OHM 2% UNGEW.	RL 092.5927	300.5270
R47	RS 0,5W5KOHM+-10%10X10X5 CERMET POTENTIOMETER T BOURNS 3386F-1-502	RS 247.7890	300.5270
R48	RS 0,5W5KOHM+-10%10X10X5 CERMET POTENTIOMETER T BOURNS 3386F-1-502	RS 247.7890	300.5270
R49	RS 0,5W5KOHM+-10%10X10X5 CERMET POTENTIOMETER T BOURNS 3386F-1-502	RS 247.7890	300.5270
R50	RL 0,35W 10,0KOHM+-1%TK50 RESISTOR DRALORIC SMA0207/10K-F-D	RL 083.1297	300.5270
R51	RL 0,35W 825 KOHM+-1%TK50 RESISTOR DRALORIC SMA0207/825K-F-C	RL 083.2812	300.5270
R52	RL 0,35W 825 KOHM+-1%TK50 RESISTOR DRALORIC SMA0207/825K-F-C	RL 083.2812	300.5270
R53	RL 0,35W 825 KOHM+-1%TK50 RESISTOR DRALORIC SMA0207/825K-F-C	RL 083.2812	300.5270
R54	RL 0,35W 47,5 OHM+-1%TK50 RESISTOR DRALORIC SMA0207/47,5OHM-F-D	RL 082.9507	300.5270
R55	RL 0,35W 10,0KOHM+-1%TK50 RESISTOR DRALORIC SMA0207/10K-F-D	RL 083.1297	300.5270
R56	RL 0,35W 475 OHM+-1%TK50 RESISTOR DRALORIC SMA0207/475OHM-F-D	RL 083.0390	300.5270
R57	RL 0,35W 221 OHM+-1%TK50 RESISTOR DRALORIC SMA0207/2210HM-F-D	RL 083.0084	300.5270
R58	RL 0,35W 10,0 OHM+-1%TK50 RESISTOR DRALORIC SMA0207/10OHM-F-D	RL 082.8852	300.5270
R59	RL 0,35W 274 OHM+-1%TK50 RESISTOR DRALORIC SMA0207/2740HM-F-D	RL 083.0178	300.5270
R60	RL 0,35W 1,82KOHM+-1%TK50 RESISTOR DRALORIC SMA0207/1,82K-F-C	RL 082.2277	300.5270
R61	RL 0,35W 332 OHM+-1%TK50 RESISTOR DRALORIC SMA0207/3320HM-F-D	RL 083.0255	300.5270
R62	RL 0,35W 100 OHM+-1%TK50 METALFILM-RESISTOR DRALORIC SMA0207/100/HM-F-D	RL 082.6543	300.5270
R63	RF 0,25W 6,8 OHM +-5% RESISTOR DRALORIC LCA0207/+-5%6,8	074.0079	300.5270

uns alle Rechte vor

Kennzeichen Component No.	Benennung/Beschreibung Designation	Sachnummer Stock No.	enthalten in contained in
R64	RL 0,35W 47,5 OHM+-1%TK50 RESISTOR DRALORIC SMA0207/47,50HM-F-D	RL 082.9507	300.5270
R65	RL 0,35W 6,81KOHM+-1%TK50 RESISTOR DRALORIC SMA 0207/6,81K-F-C	RL 082.2560	300.5270
R66	RL 0,35W 6,81KOHM+-1%TK50 RESISTOR DRALORIC SMA 0207/6,81K-F-C	RL 082.2560	300.5270
R67	RL 0,35W 47,5 OHM+-1%TK50 RESISTOR DRALORIC SMA0207/47,50HM-F-D	RL 082.9507	300.5270
R80	RL 0,21W 825 OHM+-1%TK50 RESISTOR RESISTA MK1 8250HM 1% TK50	RL 092.1438	300.5270
R81	RL 0,21W 681 OHM+-1%TK50 RESISTOR RESISTA MK1 6810HM 1% TK50	RL 092.1421	300.5270
R85	RL 0,21W 825 OHM+-1%TK50 RESISTOR RESISTA MK1 8250HM 1% TK50	RL 092.1438	300.5270
R86	RL 0,21W 681 OHM+-1%TK50 RESISTOR RESISTA MK1 6810HM 1% TK50	RL 092.1421	300.5270
R90	RL 0,21W 825 OHM+-1%TK50 RESISTOR RESISTA MK1 8250HM 1% TK50	RL 092.1438	300.5270
R91	RL 0,21W 681 OHM+-1%TK50 RESISTOR RESISTA MK1 6810HM 1% TK50	RL 092.1421	300.5270
RS1	SN 12V 1XU AU-CO MONOSTAB RELAY SDS RS-12V	SN 063.7083	300.5270
ST1	FP EINZELKONTAKT ABGEW. CONNECTOR ULMIC R&S-ZCHNG.303.0956	303.0956	300.5292
BIS/TO ST8			
ST110	ENTHALTEN IN/INCLUDED IN LEITERPLATTE/PCB		300.5292
ST111	FJ EINBAUWINKELST. SMC ANGLE CONNECTOR RADIALL R 112 669	FJ 249.9684	300.5270
BIS/TO ST114			
T1	AK BFR96 NPN 15V 5GHZ TRANSISTOR VALVO BFR96	AK 093.2738	300.5270
T2	AK BCY59IX NPN 45V 200MA TRANSISTOR SIEMENS BCY59IX	AK 010.5163	300.5270
T3	AK BCY59IX NPN 45V 200MA TRANSISTOR SIEMENS BCY59IX	AK 010.5163	300.5270

Für diese Unterlage behalten wir uns alle Rechte vor

Kennzeichen Component No.	Benennung/Beschreibung Designation	Sachnummer Stock No.	enthalten in contained in
T4	AK BCY79IX PNP 45V 200MA TRANSISTOR SIEMENS BCY79IX	AK 010.3777	300.5270
T5	AK BCY59IX NPN 45V 200MA TRANSISTOR SIEMENS BCY59IX	AK 010.5163	300.5270
T6	AK BFR96 NPN 15V 5GHZ TRANSISTOR VALVO BFR96	AK 093.2738	300.5270
T7	AK BCY59IX NPN 45V 200MA TRANSISTOR SIEMENS BCY59IX	AK 010.5163	300.5270
T8	AK BCY79IX PNP 45V 200MA TRANSISTOR SIEMENS BCY79IX	AK 010.3777	300.5270
T9	AK BCY59IX NPN 45V 200MA TRANSISTOR SIEMENS BCY59IX	AK 010.5163	300.5270
T10	AK BFR96 NPN 15V 5GHZ TRANSISTOR VALVO BFR96	AK 093.2738	300.5270
T11	AK BCY59IX NPN 45V 200MA TRANSISTOR SIEMENS BCY59IX	AK 010.5163	300.5270
T12	AK BCY79IX PNP 45V 200MA TRANSISTOR SIEMENS BCY79IX	AK 010.3777	300.5270
T13	AK BCY79IX PNP 45V 200MA TRANSISTOR SIEMENS BCY79IX	AK 010.3777	300.5270
T14	AK BCY79IX PNP 45V 200MA TRANSISTOR SIEMENS BCY79IX	AK 010.3777	300.5270
T15	AL BD139 NPN 80V 1A0 TRANSISTOR VALVO BD139	AL 274.8994	300.5270
T16	AL BD139 NPN 80V 1A0 TRANSISTOR VALVO BD139	AL 274.8994	300.5270
T17	AK BCY59IX NPN 45V 200MA TRANSISTOR SIEMENS BCY59IX	AK 010.5163	300.5270
T18	AK NE02135 NPN 12V 5GHZ TRANSISTOR NEC NE02135	300.6147	300.5270
T19	AK BCY79IX PNP 45V 200MA TRANSISTOR SIEMENS BCY79IX	AK 010.3777	300.5270
T20	AM J111A NKAN 35V FET FET SILICONIX J111A	AM 214.7685	300.5270
T21	AM J111A NKAN 35V FET FET SILICONIX J111A	AM 214.7685	300.5270
T22	AM J111A NKAN 35V FET FET SILICONIX J111A	AM 214.7685	300.5270
			- ENDE -

uns alle Rechte vor

C32 12 · R23 47 · R33 10k · R32 820 · T10 BFR96 · L21 100n · GL11 BB405B · GL12 BB405B · L29 · C26 2,6 · L24 · C23 0,8-10 · L23 100n · C25 1,1 · L27 · C27 1,1 · L22 100n · L26 · C28 22 · L28 · UR · L25 · R24 1k · C29 22 · C30 10n · C24 22 · R26 1k · T9 BCY59IX · -14V · R30 10k · R28 500 · D7 · ST110.2 · ST7 · BU7 · T11 BCY59IX · R27 56,2 · R29 392 · R90 825 · R31 3,32k · GL13 1N4448 · R91 681 · T12 BCY79IX · C33 4,7n

T18 (C, E, B)

T1, T6, T10 (C, B, E)

T20, T21, T22 (G, S, D)

T2-T5, T7, T8, T9, T11-T14, T17, T19 (C, B, E)

T15, T16 (B, C, E)

RS1 (7 6 E 5 / 4 / 1 2 3) Draufsicht Top view

(Platte) Ausgangsoszillator I
(Pcb) Output oscillator
300.5270

Zuführung Ausgangsoszillator I
Feed output oscillator
300.5292

GL22 1N4448 · R57 220 · +20V · R56 470 · T15 BD139 · R58 10 · T13 BCY79IX · R55 10k · GL23 1N4448 · UR · R62 100 · rs1 · T16 BD139 · R54 47 · T14 BCY79IX · R61 330 · GL24 1N4448 · R60 1,8k · R59 270 · -7V

C56 120 · T20 J111A · R51 820k · T21 J111A · R52 820k · T22 J111A · R53 820k · UReg / Vcontr von Phasenreg. From phase contr · ST114 · R47 5k · R48 5k · R49 5k · R50 10k

GL16 GL21 1N4448 · GL21 GL20 GL19 GL18 GL17 GL16

ST110 A-E, H, J, K, M, P, S-Z

-14V · C45 10n · C44 47µ · L41 33µ · BU3 · ST3 · D3 · ST110.6

+14V · R67 47 · C51 1µ · RS1 · T17 BCY59IX · R66 6,8k · BU5 · GL25 1N4448 · R65 6,8k · D5 · ST5 · ST110.5

C47 4,7n · R63 6,8 · R64 47 · C48 150 · C49 4,7n

Stromlauf zu: Ausgangsoszillator I
Output oscillator I

Zeichn. Nr. 300.3719 S

Z | 300.1000 V | 300.1000

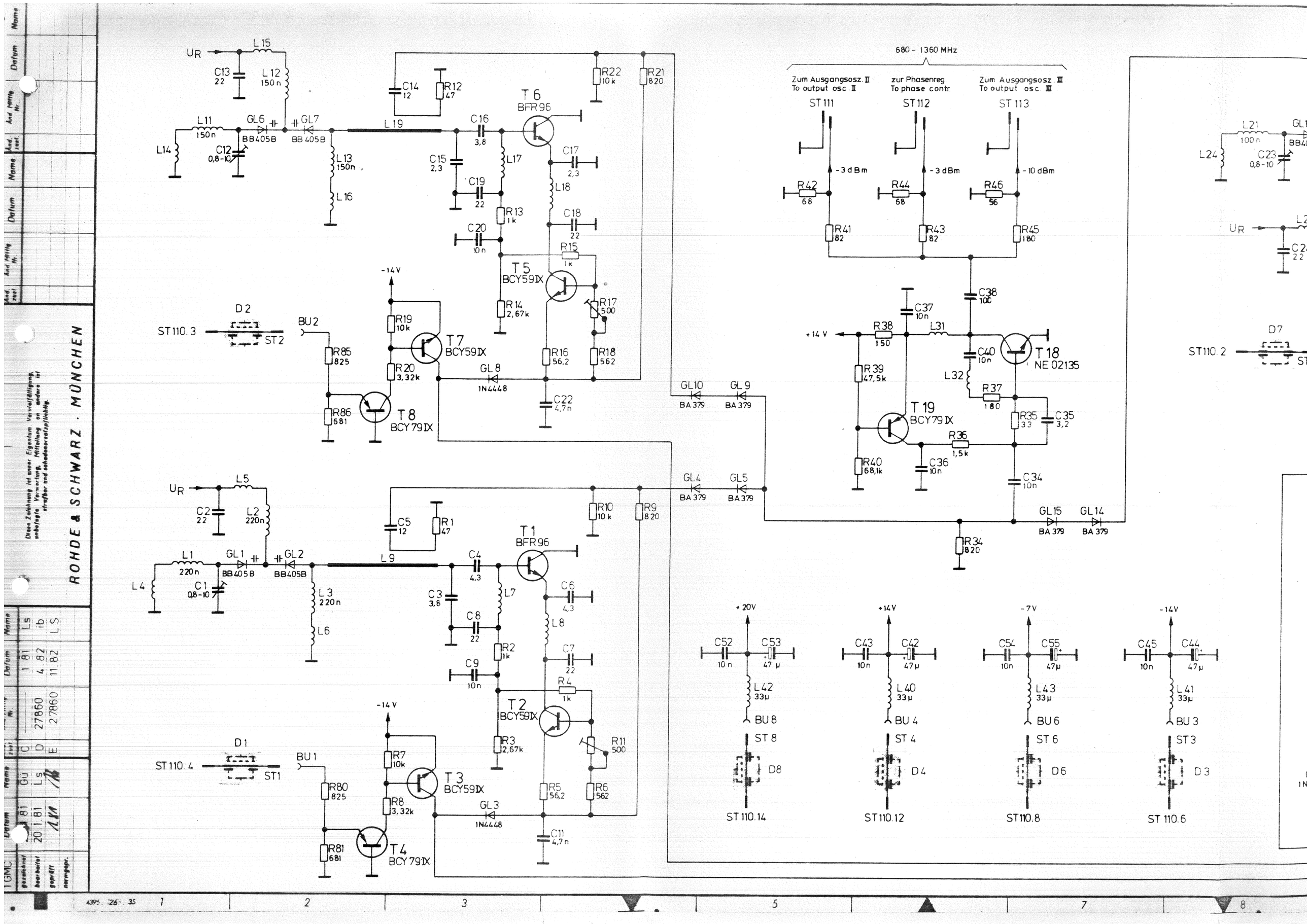

ROHDE & SCHWARZ · MÜNCHEN
Diese Zeichnung ist unser Eigentum. Vervielfältigung, unbefugte Verwertung, Mitteilung an andere ist strafbar und schadenersatzpflichtig.
680 - 1360 MHz
Zum Ausgangsosz. II
To output osc. II
zur Phasenreg.
To phase contr.
Zum Ausgangsosz. III
To output osc. III
ST 111
ST 112
ST 113
-3 dBm
-3 dBm
-10 dBm
R42 68
R44 68
R46 56
R41 82
R43 82
R45 180
C38 100
C37 10n
+14 V
R38 150
L31
C40 10n
T 18 NE 02135
R39 47,5k
L32
R37 180
T 19 BCY79IX
R35 33
C35 3,2
R36 1,5k
R40 68,1k
C36 10n
C34 10n
GL15 BA 379
GL14 BA 379
R34 820
GL10 BA 379
GL9 BA 379
GL4 BA 379
GL5 BA 379
UR
L15
C13 22
L12 150n
L11 150n
GL6 BB405B
GL7 BB405B
L14
C12 0,8-10
L13 150n
L16
L19
C14 12
R12 47
C16 3,8
T 6 BFR96
R22 10k
R21 820
C15 2,3
L17
C17 2,3
C19 22
L18
R13 1k
C18 22
C20 10n
R15 1k
T 5 BCY59IX
R14 2,67k
R17 500
-14V
D 2
ST110.3
ST2
BU2
R19 10k
T 7 BCY59IX
R85 825
R20 3,32k
GL 8 1N4448
R16 56,2
R18 562
C22 4,7n
R86 681
T 8 BCY79IX
UR
L5
C2 22
L2 220n
L1 220n
GL1 BB405B
GL2 BB405B
L4
C1 0,8-10
L3 220n
L6
L9
C5 12
R1 47
R10 10k
R9 820
C4 4,3
T 1 BFR96
C3 3,8
L7
C6 4,3
C8 22
L8
R2 1k
C7 22
C9 10n
R4 1k
T 2 BCY59IX
R3 2,67k
R11 500
-14 V
D 1
ST110.4
ST1
BU1
R7 10k
T 3 BCY59IX
R80 825
R8 3,32k
GL3 1N4448
R5 56,2
R6 562
C11 4,7n
R81 681
T 4 BCY79IX
+20V
C52 10n
C53 47µ
L42 33µ
BU 8
ST 8
D8
ST110.14
+14V
C43 10n
C42 47µ
L40 33µ
BU 4
ST 4
D4
ST110.12
-7V
C54 10n
C55 47µ
L43 33µ
BU 6
ST 6
D6
ST110.8
-14V
C45 10n
C44 47µ
L41 33µ
BU 3
ST3
D3
ST 110.6
L21 100n
L24
C23 0,8-10
UR
D7
ST110.2

Für diese Zeichnung behalten wir uns alle Rechte vor.

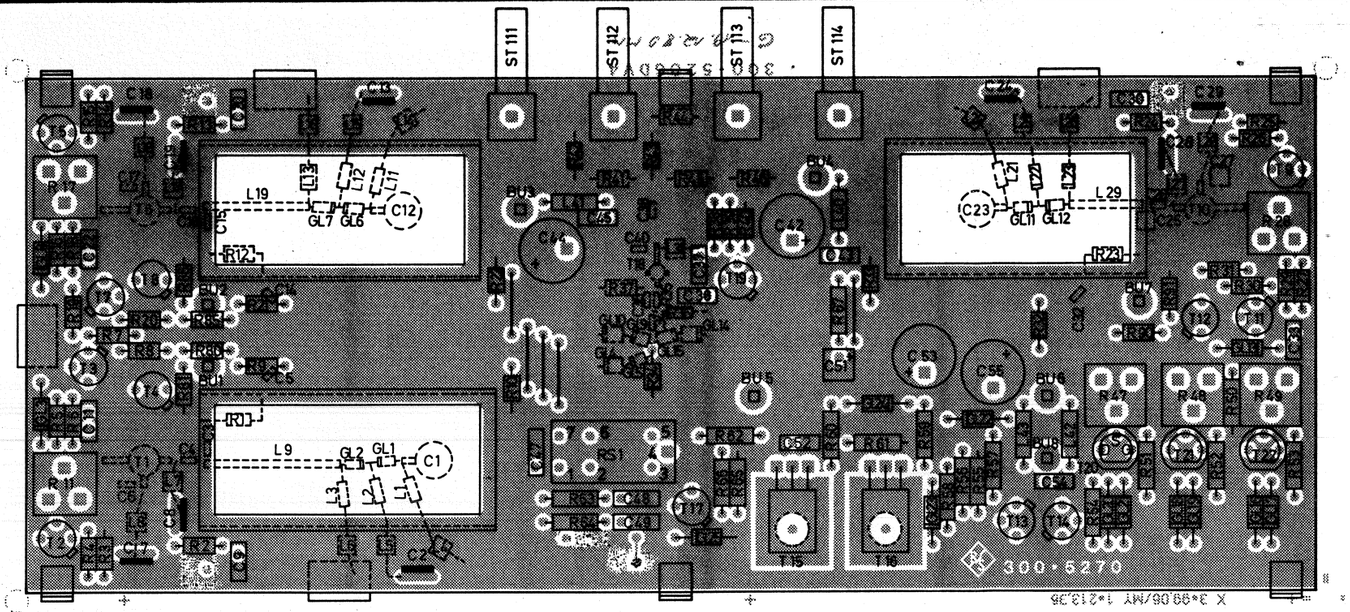

Ansicht und Leitungsführung Bauteilseite
View of tracks on component side

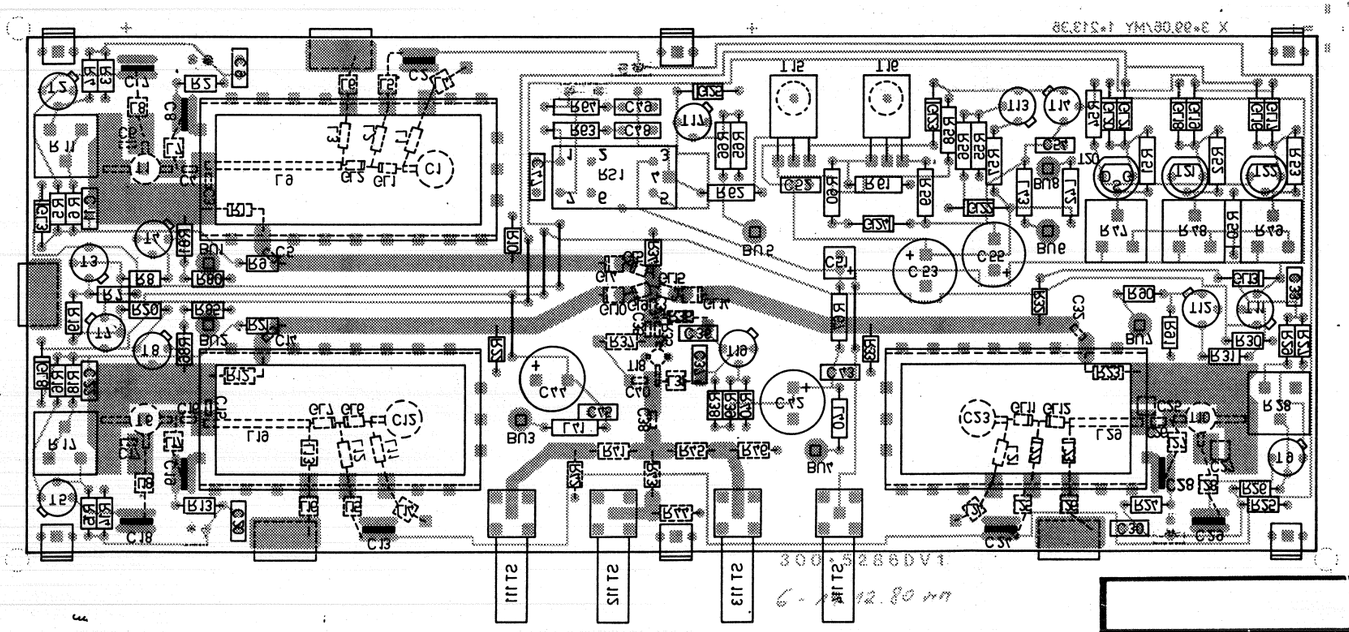

Ansicht und Leitungsführung Lötseite
View of tracks on solder side

Versorg.-Nr						VG-Sachnr	
G	—	12.80	LS	Maße ohne Toleranzangabe		Maßstab 1 : 1	
H	27860	4.82	ib			Halbzeug, Werkstoff	
				1GMC	Tag / Name	Benennung	Z
				Bearb	12.80 LS	Ausgangsoszillator I Output oscillator I	
				Gepr	1.8.80		
				Norm			
				ROHDE & SCHWARZ MÜNCHEN		Zeichn.-Nr 300.5270	Blatt-Nr 3
And Zust	Änderungs-Mitteilung	Tag	Name	zu Gerät SMPC		reg. Nr 300.1000 V	erste Z 300.3719

ROHDE&SCHWARZ

SERVICE INSTRUCTIONS FOR

Output Oscillator II

300.4315 (Y9)

Table of Contents

		Page
5	Service Instructions for Output Oscillator II 300.4315 (Y9)	5.1
5.1	Circuit Description	5.1
5.2	Checking and Adjustment Procedures	5.1
5.2.1	Checking the Output Level	5.1
5.2.2	Checking the Broadband Noise	5.2
5.3	Troubleshooting	5.3
5.3.1	Diode Switches	5.3
5.3.2	RF Levels	5.3
5.3.3	Interfaces	5.4

Parts list
Circuit diagram
Components location plans

5 Service Instructions for Output Oscillator II 300.4315 (Y9)

5.1 Circuit Description

(See circuit diagram 300.4315 S and Fig. 5-1)

Y9 contains the switchable divider stages which divide the 680-to-1360-MHz octave directly produced in the output oscillator I (Y8) down to the 21.25-to-42.5-MHz octave.

The amplifier T1, T3 boosts the input signal to the level required for the divider B1 and corrects the frequency response of the input sensitivity of B1. The output signals of opposite phase from B1 to B4 are added in the transformers TR3 to TR5 ensuring optimum utilization of the level and matching between the dividers. A low broadband noise is thus obtained in conjunction with the limiting output amplifier T5, B6 which rejects AM noise.

To prevent subharmonics, divider stages not used at the input and output are switched off. The operational amplifiers B10 to B12 produce the control voltages for the PIN diodes switches using TTL levels.

5.2 Checking and Adjustment Procedures

5.2.1 Checking the Output Level

Setup on Y9:

- Connect spectrum analyzer (max. 1.5 GHz) to ST122.
- Apply frequency from 680 to 1360 MHz with a level of -3 ±1 dBm to ST121. If Y9 is checked inside the chassis, the output oscillator I (Y8) may be used for this purpose.

Switch on XPC/SMPC and set frequency to 1000 MHz. Select division factor 1 in the output oscillator II. The control code for the division factor is available at the digital interface.

Vary the input frequency between 680 and 1360 MHz and measure output power at ST122. Proceed in the same manner for all factors. The nominal output levels are given in Table 5-2.

Table 5-2 Output levels of output oscillator II (Y9)

Division factor	Output frequency/MHz	Output level/dBm
1	680 to 1360	10 ±2 to 14 ±2
2	340 to 680	8 ±2 to 11 ±2
4	170 to 340	8 ±2
8	85 to 170	8 ±2
16	42.5 to 85	8 ±2
32	21.25 to 42.5	8 ±2

5.2.2 Checking the Broadband Noise

Setup on Y9:

→ Connect 680-to-1360-MHz signal source with a level of -3 ±1 dBm to ST121. The broadband noise of the signal source must be < -153 dB/Hz referred to 1 Hz bandwidth. If the Y9 is checked inside the chassis, the output oscillator I (Y8) can be used for this purpose.

Test setup:

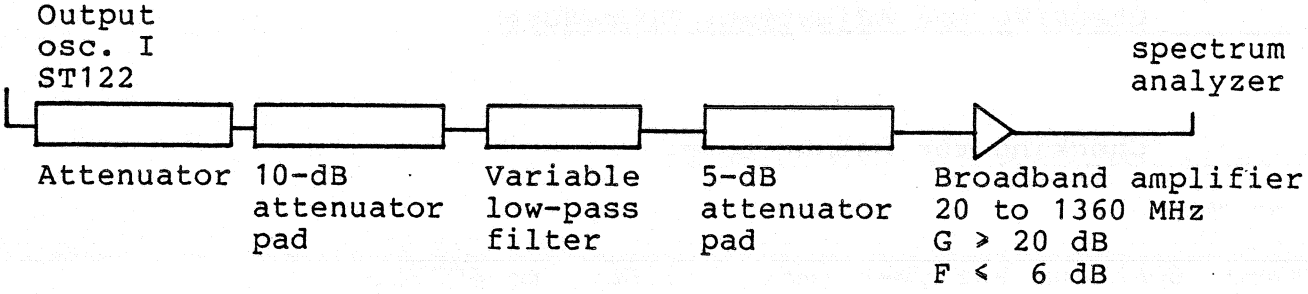

Switch on XPC/SMPC and set frequency to 1000 MHz.

a) Set variable attenuator to 40 dB. Select cut-off frequency of the low-pass filter so that the carrier frequency is within the pass band. Now vary the attenuator setting until the carrier power on the analyzer is 0 dBm.

b) Then select the cut-off frequency of the low-pass filter so that the carrier frequency is within the stop band. Set the attenuator to 0 dB. Find the noise maximum in the pass band of the low-pass filter and reduce the noise power measured to 1 Hz test bandwidth. The broadband noise of the output oscillator II is the measured noise power referred to 1 Hz bandwidth minus the preset attenuation. In the case of an undue frequency response of the test setup a correction may become necessary.

   The broadband noise over the input frequency range must be < -153 dBc referred to 1 Hz bandwidth for all division factors.

5.3 Troubleshooting

(For signature analysis see Processor Board 1)

5.3.1 Diode Switches

L corresponds to -6 ±0.5 V
H corresponds to 17.5 ±1.5 V

	Division factor					
Pin	1	2	4	8	16	32
B10.8	L	H	H	H	H	H
10.14	H	L	L	L	L	L
10.1	H	L	H	H	H	H
10.7	L	H	L	L	L	L
B11.7	H	H	L	H	H	H
11.1	L	L	H	L	L	L
11.14	H	H	H	L	H	H
11.8	L	L	L	H	L	L
B12.7	H	H	H	H	L	H
12.8	L	L	L	L	H	L
12.1	L	L	L	L	L	H
12.14	L	L	L	H	H	H

5.3.2 RF Levels

Measure the RF levels with the aid of a 500-Ω probe.
Pay attention to low-inductance earth connection of probe.

Divider	Frequency/MHz	Level/dBm
B1.4	680 to 1360	+5 to 10
B2.4	340 to 680	-5 to +5
B3.4	170 to 340	0 to +5
B4.1	85 to 170	-5 ±2
B5.1	42.5 to 85	-5 ±2

Summing point of the divider outputs (R20):

Frequency 21.25 to 1360 MHz, level -5 to +5 dBm.

5.3.3 Interfaces

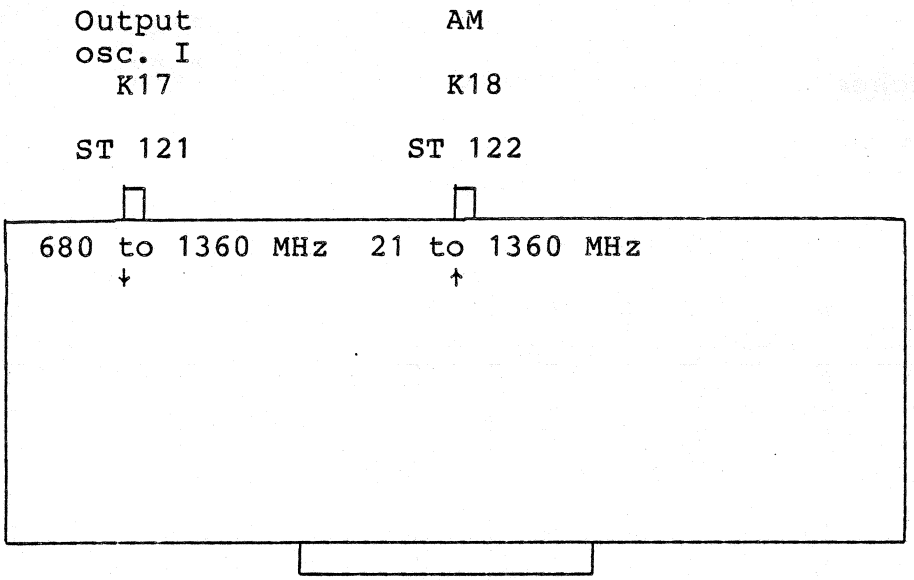

ST/BU	121	122
f	680 to 1360 MHz	21 to 1360 MHz
Level	-3 ±2 dBm	9 to 13 dBm
Z	50 Ω	50 Ω
AC-DC	AC	AC
Shape of curve	sinusoidal	rectangular

Digital Interface

Octave/MHz	Divider factor	D5 ST120.20	D4 .19	D3 .18	D2 .17	D1 .16	D0 .15
680 to 1360	1	L	L	L	L	L	H
340 to 680	2	L	L	L	L	H	L
170 to 340	4	L	L	L	H	L	L
85 to 170	8	L	L	H	L	L	L
42.5 to 85	16	L	H	L	L	L	L
21.25 to 42.5	32	H	L	L	L	L	L

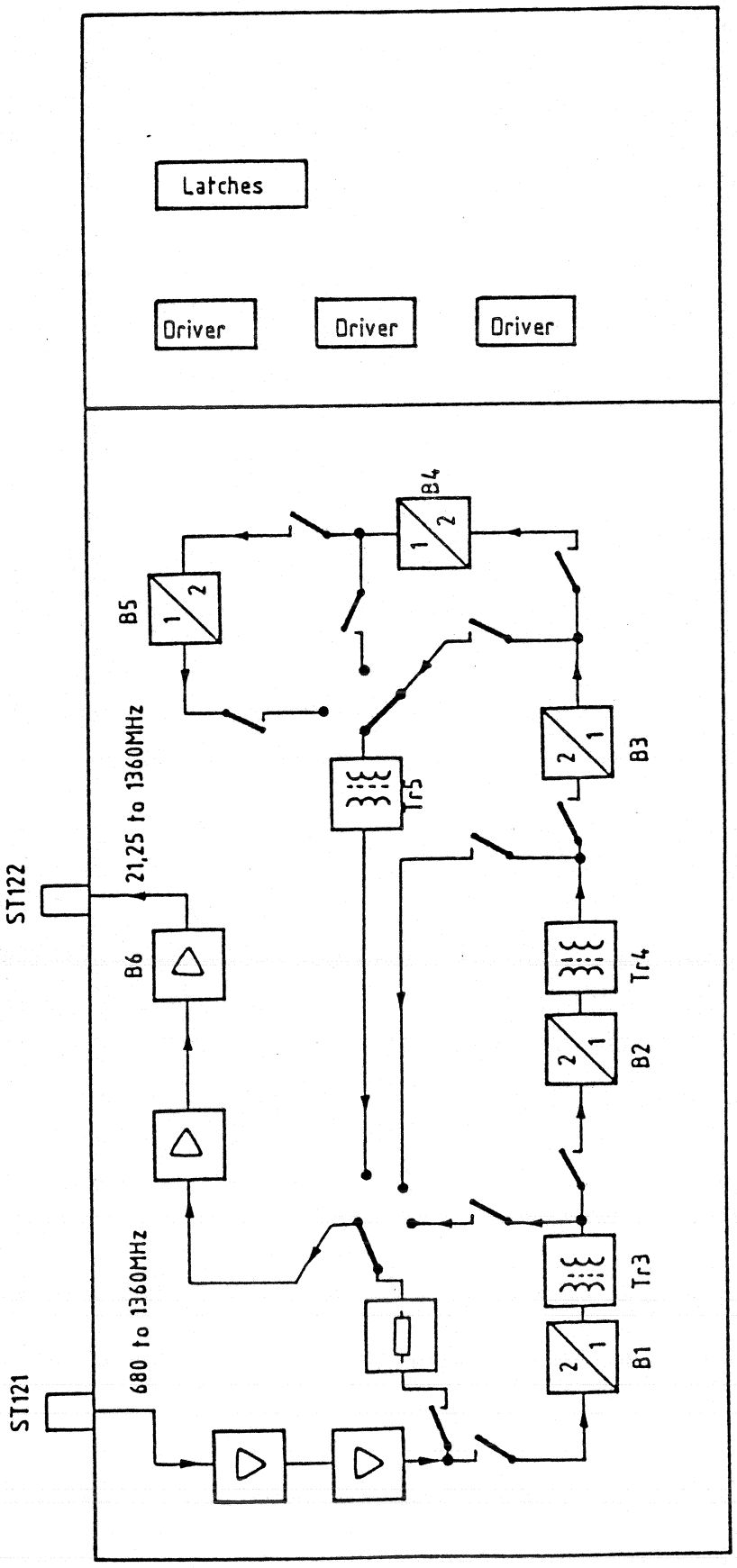

Fig. 5-1 Block diagram of the output oscillator II

ROHDE & SCHWARZ
MÜNCHEN

Schaltteillisten
Stromläufe
Bestückungspläne

Parts lists
Circuit diagrams
Components plans

R 29500 Bl. 2

Kennzeichen Component No.	Benennung/Beschreibung Designation	Sachnummer Stock No.	enthalten in contained in
B1	BL SP8606BDG 2:1DIVID UHF DIVIDER PLESSEY SP8606BDG	BL 092.9297	300.5311
B2	BL SP8606BDG 2:1DIVID UHF DIVIDER PLESSEY SP8606BDG	BL 092.9297	300.5311
B3	BL SP8606BDG 2:1DIVID UHF DIVIDER PLESSEY SP8606BDG	BL 092.9297	300.5311
B4	BL SP8602BCM 2:1DIVID UHF DIVIDER PLESSEY SP8602BCM	BL 092.9480	300.5311
B5	BL SP8602BCM 2:1DIVID UHF DIVIDER PLESSEY SP8602BCM	BL 092.9480	300.5311
B6	BD VERST.0,1-2GHZ/9DB 20V IC AMPLIFIER 0,1-2GHZ 9DB	911.6826	300.5311
B10	BO LM124J 4XOPER.AMPLIF. IC OPERATION AMPLIFIER LM NSC LM124J	BO 300.6353	300.5311
B11	BO LM124J 4XOPER.AMPLIF. IC OPERATION AMPLIFIER LM NSC LM124J	BO 300.6353	300.5311
B12	BO LM124J 4XOPER.AMPLIF. IC OPERATION AMPLIFIER LM NSC LM124J	BO 300.6353	300.5311
B20	BL SN74LS273N 8BIT-D-REG. 8BIT-D-REGISTER TEXAS SN74LS273N	BL 214.8998	300.5311
BU1	FP BUCHSE VERTIKAL P.V.1P SOCKET BERG 75377-001	FP 278.5577	300.5311
BIS/TO BU7			
BU9	FP BUCHSE VERTIKAL P.V.1P SOCKET BERG 75377-001	FP 278.5577	300.5311
BIS/TO BU12			
C1	CC 10NF+-10% 50V3K1200 CH CAPACITOR VITRAMON VJ1005Y103KFB	CC 082.3344	300.5311
C3	CC 10NF+-10% 50V3K1200 CH CAPACITOR VITRAMON VJ1005Y103KFB	CC 082.3344	300.5311
C4	CC 1NF+-10%63V K2000 CERAMIC CAPACITOR VALVO 2222 63051 102	CC 022.0784	300.5311
C5	CC 10NF+-10% 50V3K1200 CH CAPACITOR VITRAMON VJ1005Y103KFB	CC 082.3344	300.5311
C7	CC 10NF+-10% 50V3K1200 CH CAPACITOR VITRAMON VJ1005Y103KFB	CC 082.3344	300.5311
C8	CC 1NF+-10%63V K2000	CC 022.0784	300.5311

Für diese Unterlage behalten wir uns alle Rechte vor

Kennzeichen Component No.	Benennung/Beschreibung Designation	Sachnummer Stock No.	enthalten in contained in
	CERAMIC CAPACITOR VALVO 2222 63051 102		
C9	CC 1NF+-10%63V K2000	CC 022.0784	300.5311
	CERAMIC CAPACITOR VALVO 2222 63051 102		
C10	CC 1NF+-10%63V K2000	CC 022.0784	300.5311
	CERAMIC CAPACITOR VALVO 2222 63051 102		
C11	CC 10NF+-10% 50V3K1200 CH	CC 082.3344	300.5311
	CAPACITOR VITRAMON VJ1005Y103KFB		
C12	CC 1NF+80-20%R4000 TRAP	CC 086.7515	300.5311
	CERAMIC CAPACITOR DRALORIC TRE7L0E1000/2080%R40		
C13	CC 1NF+80-20%R4000 TRAP	CC 086.7515	300.5311
	CERAMIC CAPACITOR DRALORIC TRE7L0E1000/2080%R40		
C14	CC 10NF-20+50%7X8R6000	CC 087.7525	300.5311
	CAPACITOR VALVO 2222 63051 64051103		
C15	CC 1NF+80-20%R4000 TRAP	CC 086.7515	300.5311
	CERAMIC CAPACITOR DRALORIC TRE7L0E1000/2080%R40		
C16	CC 1NF+80-20%R4000 TRAP	CC 086.7515	300.5311
	CERAMIC CAPACITOR DRALORIC TRE7L0E1000/2080%R40		
C17	CC 1NF+80-20%R4000 TRAP	CC 086.7515	300.5311
	CERAMIC CAPACITOR DRALORIC TRE7L0E1000/2080%R40		
C18	CC 1NF+80-20%R4000 TRAP	CC 086.7515	300.5311
	CERAMIC CAPACITOR DRALORIC TRE7L0E1000/2080%R40		
C19	CC 1NF+80-20%R4000 TRAP	CC 086.7515	300.5311
	CERAMIC CAPACITOR DRALORIC TRE7L0E1000/2080%R40		
C20	CC 1NF+80-20%R4000 TRAP	CC 086.7515	300.5311
	CERAMIC CAPACITOR DRALORIC TRE7L0E1000/2080%R40		
C21	CC 10NF-20+50%7X8R6000	CC 087.7525	300.5311
	CAPACITOR VALVO 2222 63051 64051103		
C22	CC 10NF-20+50%7X8R6000	CC 087.7525	300.5311
	CAPACITOR VALVO 2222 63051 64051103		
C23	CC 10NF-20+50%7X8R6000	CC 087.7525	300.5311
	CAPACITOR VALVO 2222 63051 64051103		
C24	CC 1NF+80-20%R4000 TRAP	CC 086.7515	300.5311
	CERAMIC CAPACITOR DRALORIC TRE7L0E1000/2080%R40		
C25	CC 1NF+80-20%R4000 TRAP	CC 086.7515	300.5311
	CERAMIC CAPACITOR DRALORIC TRE7L0E1000/2080%R40		
C26	CC 1NF+80-20%R4000 TRAP	CC 086.7515	300.5311
	CERAMIC CAPACITOR DRALORIC TRE7L0E1000/2080%R40		
C27	CC 1NF+80-20%R4000 TRAP	CC 086.7515	300.5311

Kennzeichen Component No.	Benennung/Beschreibung Designation	Sachnummer Stock No.	enthalten in contained in
	CERAMIC CAPACITOR DRALORIC TRE7L0E1000/2080%R40		
C28	CC 1NF+80-20%R4000 TRAP	CC 086.7515	300.5311
	CERAMIC CAPACITOR DRALORIC TRE7L0E1000/2080%R40		
C29	CC 1NF+80-20%R4000 TRAP	CC 086.7515	300.5311
	CERAMIC CAPACITOR DRALORIC TRE7L0E1000/2080%R40		
C30	CC 1NF+80-20%R4000 TRAP	CC 086.7515	300.5311
	CERAMIC CAPACITOR DRALORIC TRE7L0E1000/2080%R40		
C31	CC 10NF-20+50%7X8R6000	CC 087.7525	300.5311
	CAPACITOR VALVO 2222 63051 64051103		
C32	CC 10NF-20+50%7X8R6000	CC 087.7525	300.5311
	CAPACITOR VALVO 2222 63051 64051103		
C33	CC 1NF+80-20%R4000 TRAP	CC 086.7515	300.5311
	CERAMIC CAPACITOR DRALORIC TRE7L0E1000/2080%R40		
C34	CC 1NF+80-20%R4000 TRAP	CC 086.7515	300.5311
	CERAMIC CAPACITOR DRALORIC TRE7L0E1000/2080%R40		
C35	CC 1NF+-10%63V K2000	CC 022.0784	300.5311
	CERAMIC CAPACITOR VALVO 2222 63051 102		
C36	CC 1NF+-10%63V K2000	CC 022.0784	300.5311
	CERAMIC CAPACITOR VALVO 2222 63051 102		
C38	TRIMMWERT / SELECTED		300.5311
C39	CC 10NF-20+50%7X8R6000	CC 087.7525	300.5311
	CAPACITOR VALVO 2222 63051 64051103		
C40	CC 1NF+-10%63V K2000	CC 022.0784	300.5311
	CERAMIC CAPACITOR VALVO 2222 63051 102		
C41	CC 1NF+-10%63V K2000	CC 022.0784	300.5311
	CERAMIC CAPACITOR VALVO 2222 63051 102		
C42	CC 10NF-20+50%7X8R6000	CC 087.7525	300.5311
	CAPACITOR VALVO 2222 63051 64051103		
C43	CC 10NF-20+50%7X8R6000	CC 087.7525	300.5311
	CAPACITOR VALVO 2222 63051 64051103		
C44	CC 1NF+-10%63V K2000	CC 022.0784	300.5311
	CERAMIC CAPACITOR VALVO 2222 63051 102		
C45	CC 10NF-20+50%7X8R6000	CC 087.7525	300.5311
	CAPACITOR VALVO 2222 63051 64051103		
C46	CC 10NF-20+50%7X8R6000	CC 087.7525	300.5311
	CAPACITOR VALVO 2222 63051 64051103		
C47	CC 10NF-20+50%7X8R6000	CC 087.7525	300.5311
	CAPACITOR VALVO 2222 63051 64051103		

Für diese Unterlage behalten wir uns alle Rechte vor

Kennzeichen Component No.	Benennung/Beschreibung Designation	Sachnummer Stock No.	enthalten in contained in
C48	CC 1NF+-10%63V K2000 CERAMIC CAPACITOR VALVO 2222 63051 102	CC 022.0784	300.5311
C49	CC 1NF+-10%63V K2000 CERAMIC CAPACITOR VALVO 2222 63051 102	CC 022.0784	300.5311
C50	CC 10NF-20+50%7X8R6000 CAPACITOR VALVO 2222 63051 64051103	CC 087.7525	300.5311
C51	CC 1NF+-10%63V K2000 CERAMIC CAPACITOR VALVO 2222 63051 102	CC 022.0784	300.5311
C52	CC 1NF+-10%63V K2000 CERAMIC CAPACITOR VALVO 2222 63051 102	CC 022.0784	300.5311
C53	CC 10NF-20+50%7X8R6000 CAPACITOR VALVO 2222 63051 64051103	CC 087.7525	300.5311
C54	CC 10NF-20+50%7X8R6000 CAPACITOR VALVO 2222 63051 64051103	CC 087.7525	300.5311
C55	CC 10NF-20+50%7X8R6000 CAPACITOR VALVO 2222 63051 64051103	CC 087.7525	300.5311
C56	CC 1NF+-10%63V K2000 CERAMIC CAPACITOR VALVO 2222 63051 102	CC 022.0784	300.5311
C57	CC 1NF+-10%63V K2000 CERAMIC CAPACITOR VALVO 2222 63051 102	CC 022.0784	300.5311
C58	CC 10NF-20+50%7X8R6000 CAPACITOR VALVO 2222 63051 64051103	CC 087.7525	300.5311
C59	CC 10NF+-10% 50V3K1200 CH CAPACITOR VITRAMON VJ1005Y103KFB	CC 082.3344	300.5311
C60	CC 4,7PF+-0,5PF100V3NPO C CAPACITOR VITRAMON VJ1005A4R7DFB	CC 082.2977	300.5311
C61	CC 10NF+-10% 50V3K1200 CH CAPACITOR VITRAMON VJ1005Y103KFB	CC 082.3344	300.5311
C62	CC 10NF-20+50%7X8R6000 CAPACITOR VALVO 2222 63051 64051103	CC 087.7525	300.5311
C63	CC 10NF-20+50%7X8R6000 CAPACITOR VALVO 2222 63051 64051103	CC 087.7525	300.5311
C64	CC 10NF-20+50%7X8R6000 CAPACITOR VALVO 2222 63051 64051103	CC 087.7525	300.5311
C70	CC 1NF+-10%63V K2000 CERAMIC CAPACITOR VALVO 2222 63051 102	CC 022.0784	300.5311
C71	CC 1NF+-10%63V K2000 CERAMIC CAPACITOR VALVO 2222 63051 102	CC 022.0784	300.5311

Kennzeichen Component No.	Benennung/Beschreibung Designation	Sachnummer Stock No.	enthalten in contained in
C72	CC 1NF+-10%63V K2000 CERAMIC CAPACITOR VALVO 2222 63051 102	CC 022.0784	300.5311
C100	CC 100NF+-10%50V5K1200VIE CAPACITOR AEROVOX CKR05BX104KL	CC 084.5350	300.5311
C101	CC 100NF+-10%50V5K1200VIE CAPACITOR AEROVOX CKR05BX104KL	CC 084.5350	300.5311
C102	CC 100NF+-10%50V5K1200VIE CAPACITOR AEROVOX CKR05BX104KL	CC 084.5350	300.5311
C103	CE 47UF -10+100%40V 11X13 ELECTROLYTIC CAPACITOR SIEMENS B41316-B7476-Z	CE 022.7589	300.5311
C105	CE 47UF -10+100%40V 11X13 ELECTROLYTIC CAPACITOR SIEMENS B41316-B7476-Z	CE 022.7589	300.5311
C106	CE 47UF -10+100%40V 11X13 ELECTROLYTIC CAPACITOR SIEMENS B41316-B7476-Z	CE 022.7589	300.5311
C110	CC 10NF-20+50%7X8R6000 CAPACITOR VALVO 2222 63051 64051103	CC 087.7525	300.5311
C111	CC 10NF-20+50%7X8R6000 CAPACITOR VALVO 2222 63051 64051103	CC 087.7525	300.5311
C112	CC 10NF-20+50%7X8R6000 CAPACITOR VALVO 2222 63051 64051103	CC 087.7525	300.5311
C113	CC 10NF-20+50%7X8R6000 CAPACITOR VALVO 2222 63051 64051103	CC 087.7525	300.5311
C114	CC 10NF-20+50%7X8R6000 CAPACITOR VALVO 2222 63051 64051103	CC 087.7525	300.5311
C115	CC 10NF-20+50%7X8R6000 CAPACITOR VALVO 2222 63051 64051103	CC 087.7525	300.5311
C120	CC 10NF-20+50%7X8R6000 CAPACITOR VALVO 2222 63051 64051103	CC 087.7525	300.5311
C121	CE 47UF -10+100%16V 9X13 ELECTROLYTIC CAPACITOR ROEDERST ELKO EK47/16	CE 022.7543	300.5311
D1	LD 35DB/200M-10GHZ PI-FIL CHOKE ERIE 1214-038	LD 300.6818	300.5334
BIS/TO D6			
D7	LD 35DB/200M-10GHZ PI-FIL CHOKE ERIE 1214-038	LD 300.6818	300.5334
D9	LD 35DB/200M-10GHZ FI-FIL CHOKE ERIE 1214-038	LD 300.6818	300.5334

Für diese Unterlage behalten wir uns alle Rechte vor

Kennzeichen Component No.	Benennung/Beschreibung Designation	Sachnummer Stock No.	enthalten in contained in
BIS/TO D12			
GL1	AE BA379 PIN DIODE	300.6918	300.5311
GL2	AE BA379 PIN DIODE	300.6924	300.5311
GL3	AE BA379 PIN DIODE	300.6918	300.5311
GL4	AE BA379 PIN DIODE	300.6924	300.5311
GL5	AE BA379 PIN DIODE	300.6924	300.5311
GL6	AE BA379 PIN DIODE	300.6918	300.5311
GL7	AE BA379 PIN DIODE	300.6918	300.5311
GL8	AE BA379 PIN DIODE	300.6924	300.5311
GL9	AE BA379 PIN DIODE	300.6918	300.5311
GL10	AE BA379 PIN DIODE	300.6918	300.5311
GL11	AE BA379 PIN DIODE	300.6924	300.5311
GL12	AE BA379 PIN DIODE	300.6918	300.5311
GL13	AE BA379 PIN DIODE	300.6924	300.5311
GL14	AE BA379 PIN DIODE	300.6918	300.5311
GL15	AE BA379 PIN DIODE	300.6924	300.5311
GL16	AE BA379 PIN DIODE	300.6918	300.5311
GL17	AE BA244 BER.SCH.DIOD.UHF DIODE INTERMETAL BA244	AE 439.6310	300.5311
GL18	AE BA244 BER.SCH.DIOD.UHF DIODE INTERMETAL BA244	AE 439.6310	300.5311
GL19	AE BA244 BER.SCH.DIOD.UHF DIODE INTERMETAL BA244	AE 439.6310	300.5311
GL20	AE BA244 BER.SCH.DIOD.UHF DIODE INTERMETAL BA244	AE 439.6310	300.5311
GL21	AE BA244 BER.SCH.DIOD.UHF DIODE INTERMETAL BA244	AE 439.6310	300.5311
GL22	AE BA244 BER.SCH.DIOD.UHF DIODE INTERMETAL BA244	AE 439.6310	300.5311
GL23	AE BA244 BER.SCH.DIOD.UHF DIODE INTERMETAL BA244	AE 439.6310	300.5311
GL24	AE BA244 BER.SCH.DIOD.UHF	AE 439.6310	300.5311

Kennzeichen Component No.	Benennung/Beschreibung Designation	Sachnummer Stock No.	enthalten in contained in
	DIODE INTERMETAL BA244		
GL25	AE BA244 BER.SCH.DIOD.UHF DIODE INTERMETAL BA244	AE 439.6310	300.5311
GL26	AE BA244 BER.SCH.DIOD.UHF DIODE INTERMETAL BA244	AE 439.6310	300.5311
GL27	AE BA379 PIN DIODE	300.6924	300.5311
GL28	AE BA379 PIN DIODE	300.6918	300.5311
GL29	AE BA244 BER.SCH.DIOD.UHF DIODE INTERMETAL BA244	AE 439.6310	300.5311
GL30	AE BA244 BER.SCH.DIOD.UHF DIODE INTERMETAL BA244	AE 439.6310	300.5311
GL31	AE BA244 BER.SCH.DIOD.UHF DIODE INTERMETAL BA244	AE 439.6310	300.5311
GL32	AE BA244 BER.SCH.DIOD.UHF DIODE INTERMETAL BA244	AE 439.6310	300.5311
GL33	AE BA244 BER.SCH.DIOD.UHF DIODE INTERMETAL BA244	AE 439.6310	300.5311
GL34	AE BA244 BER.SCH.DIOD.UHF DIODE INTERMETAL BA244	AE 439.6310	300.5311
GL35	AE BA244 BER.SCH.DIOD.UHF DIODE INTERMETAL BA244	AE 439.6310	300.5311
GL36	AE BA244 BER.SCH.DIOD.UHF DIODE INTERMETAL BA244	AE 439.6310	300.5311
GL37	AE BA244 BER.SCH.DIOD.UHF DIODE INTERMETAL BA244	AE 439.6310	300.5311
GL38	AE BA244 BER.SCH.DIOD.UHF DIODE INTERMETAL BA244	AE 439.6310	300.5311
GL39	AE BA244 BER.SCH.DIOD.UHF DIODE INTERMETAL BA244	AE 439.6310	300.5311
GL40	AE BA244 BER.SCH.DIOD.UHF DIODE INTERMETAL BA244	AE 439.6310	300.5311
GL41	AE BA244 BER.SCH.DIOD.UHF DIODE INTERMETAL BA244	AE 439.6310	300.5311
GL42	AE BA244 BER.SCH.DIOD.UHF DIODE INTERMETAL BA244	AE 439.6310	300.5311
GL43	AE BA244 BER.SCH.DIOD.UHF DIODE INTERMETAL BA244	AE 439.6310	300.5311

Für diese Unterlage behalten wir uns alle Rechte vor

Kennzeichen Component No.	Benennung/Beschreibung Designation	Sachnummer Stock No.	enthalten in contained in
GL44	AE BA244 BER.SCH.DIOD.UHF DIODE INTERMETAL BA244	AE 439.6310	300.5311
GL80	AD 1N4148M 75V 0,08A UDI DIODE VALVO 1N4148M	012.1536	300.5311
GL81	AD 1N4148M 75V 0,08A UDI DIODE VALVO 1N4148M	012.1536	300.5311
GL82	AD 1N4148M 75V 0,08A UDI DIODE VALVO 1N4148M	012.1536	300.5311
GL83	AD 1N4148M 75V 0,08A UDI DIODE VALVO 1N4148M	012.1536	300.5311
GL84	AD 1N4148M 75V 0,08A UDI DIODE VALVO 1N4148M	012.1536	300.5311
GL85	AD 1N4148M 75V 0,08A UDI DIODE VALVO 1N4148M	012.1536	300.5311
L1	SPULE COIL	300.9400	300.5311
L2	SPULE COIL	300.9400	300.5311
L6	SPULE COIL	300.9400	300.5311
L7	ENTHALTEN IN/INCLUDED IN LEITERPLATTE/PCB		300.5311
L100	LD 4,7 UH 10% 158 MIA CHOKE DELEVAN	LD 092.3230	300.5311
L101	LD 100 UH 10% 52 MIA CHOKE FELEVAN DROSSEL0819-72	LD 092.3399	300.5311
L102	LD 0,56 UH 10% 560 MIA CHOKE DELEVAN	LD 092.3124	300.5311
L103	LD 4,7 UH 10% 158 MIA CHOKE DELEVAN	LD 092.3230	300.5311
R1	RG 0,125W 33 OHM+-1% CHIP CHIP RESISTOR MSI WA-4 330HM 1% PG-T	337.8214	300.5311
R2	RL 0,21W 1,50KOHM+-1%TK50 RESISTOR RESISTA MK1 1K5 1% TK50	RL 092.1467	300.5311
R3	RL 0,21W 68,1 OHM+-1%TK50 RESISTOR RESISTA MK1 68,10HM 1% TK50	RL 092.1309	300.5311
R4	RL 0,21W 68,1KOHM+-1%TK50 RESISTOR RESISTA MK1 68K10 1% TK50	RL 092.1667	300.5311
R5	RL 0,21W 47,5KOHM+-1%TK50 RESISTOR	RL 092.1644	300.5311

095.0026-0481

Kennzeichen Component No.	Benennung/Beschreibung Designation	Sachnummer Stock No.	enthalten in contained in
R6	RESISTA MK1 47K5 1% TK50 RL 0,21W 180 OHM2% UNGEW. RESISTOR	RL 092.5985	300.5311
R7	RESISTA MK1 180OHM 2% UNGEW. RG 0,125W 33 OHM+-1% CHIP CHIP RESISTOR	337.8214	300.5311
R8	MSI WA-4 330HM 1% PG-T RL 0,21W 1,50KOHM+-1%TK50 RESISTOR	RL 092.1467	300.5311
R9	RESISTA MK1 1K5 1% TK50 RL 0,21W 120 OHM2% UNGEW. RESISTOR	RL 092.5962	300.5311
R10	RESISTA MK1 1200HM 2% UNGEW. RL 0,21W 68,1KOHM+-1%TK50 RESISTOR	RL 092.1667	300.5311
R11	RESISTA MK1 68K10 1% TK50 RL 0,21W 47,5KOHM+-1%TK50 RESISTOR	RL 092.1644	300.5311
R12	RESISTA MK1 47K5 1% TK50 RL 0,21W 150 OHM2% UNGEW. RESISTOR	RL 092.5979	300.5311
R13	RESISTA MK1 1500HM 2% UNGEW. RL 0,21W 820 OHM2% UNGEW. RESISTOR	RL 092.6069	300.5311
R14	RESISTA MK1 8200HM 2% UNG. RL 0,21W 1,50KOHM+-1%TK50 RESISTOR	RL 092.1467	300.5311
R15	RESISTA MK1 1K5 1% TK50 RL 0,21W 1,50KOHM+-1%TK50 RESISTOR	RL 092.1467	300.5311
R16	RESISTA MK1 1K5 1% TK50 RL 0,21W 150 OHM2% UNGEW. RESISTOR	RL 092.5979	300.5311
R17	RESISTA MK1 1500HM 2% UNGEW. RL 0,21W 39 OHM2% UNGEW. RESISTOR	RL 092.5904	300.5311
R18	RESISTA MK1 390HM 2% UNGEW. RL 0,21W 150 OHM2% UNGEW. RESISTOR	RL 092.5979	300.5311
R19	RESISTA MK1 1500HM 2% UNGEW. RL 0,21W 1,50KOHM+-1%TK50 RESISTOR	RL 092.1467	300.5311
R20	RESISTA MK1 1K5 1% TK50 RL 0,21W 820 OHM2% UNGEW. RESISTOR	RL 092.6069	300.5311
R21	RESISTA MK1 8200HM 2% UNG. RL 0,21W 5,62KOHM+-1%TK50 RESISTOR	RL 092.1538	300.5311
R22	RESISTA MK1 5k62 1% TK50 RL 0,21W 390 OHM2% UNGEW. RESISTOR	RL 092.6023	300.5311
R23	RESISTA MK1 3900HM 2% UNGEW. RL 0,21W 390 OHM2% UNGEW. RESISTOR	RL 092.6023	300.5311
R24	RESISTA MK1 3900HM 2% UNGEW. RL 0,21W 820 OHM2% UNGEW. RESISTOR	RL 092.6069	300.5311
		300.4315	SA BL 9+

Für diese Unterlage behalten wir uns alle Rechte vor

Kennzeichen Component No.	Benennung/Beschreibung Designation	Sachnummer Stock No.	enthalten in contained in
R25	RESISTA MK1 8200HM 2% UNG. RL 0,21W 820 OHM2% UNGEW. RESISTOR	RL 092.6069	300.5311
R26	RESISTA MK1 8200HM 2% UNG. RL 0,21W 1,50KOHM+-1%TK50 RESISTOR	RL 092.1467	300.5311
R27	RESISTA MK1 1K5 1% TK50 RL 0,21W 5,62KOHM+-1%TK50 RESISTOR	RL 092.1538	300.5311
R28	RESISTA MK1 5K62 1% TK50 RL 0,21W 470 OHM2% UNGEW. RESISTOR	RL 092.6030	300.5311
R29	RESISTA MK1 4700HM 2% UNGEW. RL 0,21W 470 OHM2% UNGEW. RESISTOR	RL 092.6030	300.5311
R30	RESISTA MK1 4700HM 2% UNGEW. RL 0,21W 820 OHM2% UNGEW. RESISTOR	RL 092.6069	300.5311
R31	RESISTA MK1 8200HM 2% UNG. RL 0,21W 820 OHM2% UNGEW. RESISTOR	RL 092.6069	300.5311
R32	RESISTA MK1 8200HM 2% UNG. RL 0,21W 1,50KOHM+-1%TK50 RESISTOR	RL 092.1467	300.5311
R33	RESISTA MK1 1K5 1% TK50 RL 0,21W 5,62KOHM+-1%TK50 RESISTOR	RL 092.1538	300.5311
R34	RESISTA MK1 5K62 1% TK50 RL 0,21W 470 OHM2% UNGEW. RESISTOR	RL 092.6030	300.5311
R35	RESISTA MK1 4700HM 2% UNGEW. RL 0,21W 470 OHM2% UNGEW. RESISTOR	RL 092.6030	300.5311
R36	RESISTA MK1 4700HM 2% UNGEW. RL 0,21W 1,78KOHM+-1%TK50 RESISTOR	RL 092.4720	300.5311
R37	RESISTA MK1 1K78 1% TK50 RL 0,21W 1,78KOHM+-1%TK50 RESISTOR	RL 092.4720	300.5311
R38	RESISTA MK1 1K78 1% TK50 RL 0,21W 1,78KOHM+-1%TK50 RESISTOR	RL 092.4720	300.5311
R39	RESISTA MK1 1K78 1% TK50 RL 0,21W 1,78KOHM+-1%TK50 RESISTOR	RL 092.4720	300.5311
R40	RESISTA MK1 1K78 1% TK50 RL 0,21W 2,15KOHM+-1%TK50 RESISTOR	RL 092.4772	300.5311
R41	RESISTA MK1 2K15 1% TK50 RL 0,21W 2,15KOHM+-1%TK50 RESISTOR	RL 092.4772	300.5311
R42	RESISTA MK1 2K15 1% TK50 RL 0,21W 15,0KOHM+-1%TK50 RESISTOR	RL 092.1580	300.5311
R43	RESISTA MK1 15K 1% TK50 RL 0,21W 820 OHM2% UNGEW. RESISTOR	RL 092.6069	300.5311
		300.4315	SA BL10+

Kennzeichen Component No.	Benennung/Beschreibung Designation	Sachnummer Stock No.	enthalten in contained in
R44	RESISTA MK1 8200HM 2% UNG. RL 0,21W 1,50KOHM+-1%TK50 RESISTOR	RL 092.1467	300.5311
R45	RESISTA MK1 1K5 1% TK50 RL 0,21W 1,50KOHM+-1%TK50 RESISTOR	RL 092.1467	300.5311
R46	RESISTA MK1 1K5 1% TK50 RL 0,21W 1,50KOHM+-1%TK50 RESISTOR	RL 092.1467	300.5311
R47	RESISTA MK1 1K5 1% TK50 RL 0,21W 1,78KOHM+-1%TK50 RESISTOR	RL 092.4720	300.5311
R48	RESISTA MK1 1K78 1% TK50 RL 0,21W 1,78KOHM+-1%TK50 RESISTOR	RL 092.4720	300.5311
R49	RESISTA MK1 1K78 1% TK50 RL 0,21W 1,78KOHM+-1%TK50 RESISTOR	RL 092.4720	300.5311
R50	RESISTA MK1 1K78 1% TK50 RL 0,21W 1,78KOHM+-1%TK50 RESISTOR	RL 092.4720	300.5311
R51	RESISTA MK1 1K78 1% TK50 RL 0,21W 2,15KOHM+-1%TK50 RESISTOR	RL 092.4772	300.5311
R52	RESISTA MK1 2K15 1% TK50 RL 0,21W 2,15KOHM+-1%TK50 RESISTOR	RL 092.4772	300.5311
R53	RESISTA MK1 2K15 1% TK50 RL 0,21W 1,50KOHM+-1%TK50 RESISTOR	RL 092.1467	300.5311
R54	RESISTA MK1 1K5 1% TK50 RL 0,21W 1,50KOHM+-1%TK50 RESISTOR	RL 092.1467	300.5311
R55	RESISTA MK1 1K5 1% TK50 RL 0,21W 1,50KOHM+-1%TK50 RESISTOR	RL 092.1467	300.5311
R56	RESISTA MK1 1K5 1% TK50 RL 0,21W 1,78KOHM+-1%TK50 RESISTOR	RL 092.4720	300.5311
R57	RESISTA MK1 1K78 1% TK50 RL 0,21W 1,78KOHM+-1%TK50 RESISTOR	RL 092.4720	300.5311
R58	RESISTA MK1 1K78 1% TK50 RL 0,21W 1,78KOHM+-1%TK50 RESISTOR	RL 092.4720	300.5311
R59	RESISTA MK1 1K78 1% TK50 RL 0,21W 1,78KOHM+-1%TK50 RESISTOR	RL 092.4720	300.5311
R60	RESISTA MK1 1K78 1% TK50 RG 0,125W 33 OHM+-1% CHIP CHIP RESISTOR	337.8214	300.5311
R61	MSI WA-4 330HM 1% PG-T RL 0,21W 180 OHM2% UNGEW. RESISTOR	RL 092.5985	300.5311
R62	RESISTA MK1 1800HM 2% UNGEW. RL 0,21W 1,50KOHM+-1%TK50 RESISTOR	RL 092.1467	300.5311

Für diese Unterlage behalten wir uns alle Rechte vor

Kennzeichen Component No.	Benennung/Beschreibung Designation	Sachnummer Stock No.	enthalten in contained in
	RESISTA MK1 1K5 1% TK50		
R63	RL 0,21W 68,1KOHM+-1%TK50	RL 092.1667	300.5311
	RESISTOR		
	RESISTA MK1 68K10 1% TK50		
R64	RL 0,21W 47,5KOHM+-1%TK50	RL 092.1644	300.5311
	RESISTOR		
	RESISTA MK1 47K5 1% TK50		
R65	RL 0,21W 150 OHM2% UNGEW.	RL 092.5979	300.5311
	RESISTOR		
	RESISTA MK1 150OHM 2% UNGEW.		
R66	RL 0,35W 15,0KOHM+-1%TK50	RL 083.1400	300.5311
	RESISTOR		
	DRALORIC SMA0207/15K-F-D		
R67	RL 0,35W 15,0KOHM+-1%TK50	RL 083.1400	300.5311
	RESISTOR		
	DRALORIC SMA0207/15K-F-D		
R80	RL 0,35W 18,2KOHM+-1%TK50	RL 083.1480	300.5311
	RESISTOR		
	DRALORIC SMA/207/18,2K-F-C		
R81	RL 0,35W 1,50KOHM+-1%TK50	RL 083.0732	300.5311
	RESISTOR		
	DRALORIC SMA0207/1,50K-F-D		
R82	RL 0,35W 18,2KOHM+-1%TK50	RL 083.1480	300.5311
	RESISTOR		
	DRALORIC SMA/207/18,2K-F-C		
R83	RL 0,35W 1,50KOHM+-1%TK50	RL 083.0732	300.5311
	RESISTOR		
	DRALORIC SMA0207/1,50K-F-D		
R84	RL 0,35W 18,2KOHM+-1%TK50	RL 083.1480	300.5311
	RESISTOR		
	DRALORIC SMA/207/18,2K-F-C		
R85	RL 0,35W 1,50KOHM+-1%TK50	RL 083.0732	300.5311
	RESISTOR		
	DRALORIC SMA0207/1,50K-F-D		
R86	RL 0,35W 10,0KOHM+-1%TK50	RL 083.1297	300.5311
	RESISTOR		
	DRALORIC SMA0207/10K-F-D		
R99.	RL 0,21W 33 OHM2% UNGEW.	RL 092.5891	300.5311
	RESISTOR		
	RESISTA MK1 330HM 2% UNGEW.		
R100	RL 0,21W 294 OHM+-1%TK50	RL 092.4550	300.5311
	RESISTOR		
	RESISTA MK1 294 1% TK50		
R101	RL 0,21W 36,5 OHM+-1%TK50	RL 092.0077	300.5311
	RESISTOR		
R102	RS 0,5W20 OHM+-10%10X10X5	RS 087.7548	300.5311
	CERMET POTENTIOMETER T		
	BOURNS 3386F-1-200		
ST1	FP EINZELKONTAKTSTIFT	300.8804	300.5334
	SINGLE-CONTACT PIN		
	ULMIC R&S.ZCHNG.300.8804		
BIS/TO			
ST6			
ST7	FP EINZELKONTAKTSTIFT	300.8804	300.5334
	SINGLE-CONTACT PIN		
	ULMIC R&S.ZCHNG.300.8804		
		300.4315	SA BL12+

Kennzeichen Component No.	Benennung/Beschreibung Designation	Sachnummer Stock No.	enthalten in contained in
ST9	FP EINZELKONTAKTSTIFT SINGLE-CONTACT PIN ULMIC R&S.ZCHNG.300.8804	300.8804	300.5334
BIS/TO ST12			
ST120	ENTHALTEN IN 300.5340		300.5334
ST121	FJ EINBAUWINKELST. SMC ANGLE CONNECTOR RADIALL R 112 669	FJ 249.9684	300.5311
ST122	FJ EINBAUWINKELST. SMC ANGLE CONNECTOR RADIALL R 112 669	FJ 249.9684	300.5311
T1	AK NE02135 NPN 12V 5GHZ TRANSISTOR NEC NE02135	300.6147	300.5311
T2	AK BCY79IX PNP 45V 200MA TRANSISTOR SIEMENS BCY79IX	AK 010.3777	300.5311
T3	AK NE02135 NPN 12V 5GHZ TRANSISTOR NEC NE02135	300.6147	300.5311
T4	AK BCY79IX PNP 45V 200MA TRANSISTOR SIEMENS BCY79IX	AK 010.3777	300.5311
T5	AK NE02135 NPN 12V 5GHZ TRANSISTOR NEC NE02135	300.6147	300.5311
T6	AK BCY79IX PNP 45V 200MA TRANSISTOR SIEMENS BCY79IX	AK 010.3777	300.5311
T100	AL BD438 PNP 45V 4A0 TRANSISTOR VALVO BD438	AL 010.0403	300.5311
TR3	UEBERTRAGER TRANSFORMER	300.9246	300.5311
TR4	UEBERTRAGER TRANSFORMER	300.8885	300.5311
TR5	UEBERTRAGER TRANSFORMER	300.8885	300.5311
			- ENDE -

Für diese Unterlage behalten wir uns alle Rechte vor

zum / to Modulator

GL 80 1N 4148 → B 20.6
GL 81 1N 4148 → B 20.16
GL 82 1N 4148 → B 20.5
R86 10k

B12 IV LM 124

B11.2 B11.12 B11.5

B11 III LM124 B11.13 B20.6

B12.6 B20.16

B12 III LM 124

B 20.5

B12 I LM 124

C45 10n
R44 1,5k
C44 1n
TR 5
GL 27 BA 379
R43 820
C43 10n

1,2,3,8,9 12,13,14

B 3 SP 8606

GL 25 BA 244
GL 26 BA 244
GL 24 BA 244
R39 1,8k
C39 10n
GL 23 BA 244
R38 1,8k
GL 21 BA 244
GL 22 BA 244
GL 18 BA 244
GL 17 BA 244
GL 19 BA 244
GL 20 BA 244
C38

C30 1n
R33
R32 1,5k
C35 1n
C36 1n
R34 680
R35 680
R36 1,8k
R37 1,8k
C33 1n
C34 1n
C72 1n
C31 10n
-5,2V

-7 V
R42 15k
C40 1n
C41 1n
R40 2,2k
R41 2,2k
C42 10n

B 4 SP 8602

C46 10n
C47 10n
C49 1n
C48 1n
R46 1,5k
R45 1,5k
R48 1,8k
R47 1,8k
-7V

GL 33 BA244
GL 34 BA 244
GL 32 BA 244
R 50 1,8k
C50 10n
GL 31 BA 244
R 49 1,8k
GL30 BA244
GL 29 BA 244
GL 36 BA 244
GL 35 BA 244
GL 38 BA244
GL 37 BA244
R51 2,2k
R52 2,2k

C52 1n
C51 1n
R53 15k

B 5 SP 8602

C 53 10n
C54 10n
C55 10n
R54 1,5k
R55 1,5k
R57 1,8k
R56 1,8k

GL 44 BA 244
GL 43 BA 244
GL 42 BA 244
R58 1,8k
C 58 10n
GL 41 BA 244
R59 1,8k
GL39 BA244
GL 40 BA 244
C57 1n
C56 1n

B11 II LM124
B11.9 B11. 2
B11 IV LM 124
B12.10 GL 81 (Anode)
+20V
R84 18k
R 85 1,5k
B12 II LM 124
B11.9

C111, C112
B11, B12 M 124
4,C115

+14 V L103 4,7 µH BU 7 ST 7 ST120 .12 C103 47 µ D7
-7V L102 0,56 µ BU 12 ST 12 .8 C102 100n C106 47 µ D 12
T100 BD438
5,2V
R101 36,5
R102 20
C121 47µ
R100 294

+20 V L100 4,7 µH BU 10 ST 10 ST120 .14 C100 100n C105 47 µ D 10
+5 V L101 100 µ BU 11 ST 11 .10 C101 100n D 11

1 2 3

B1, B2, B3, B10 B11, B12
Draufsicht Top view

B 20
Draufsicht Top view

B4, B5

T1, T3, T5

T2, T4, T6

Stromlauf zu: Ausgangsoszillator II / Output oscillator II	Z	Zeichn.-Nr. 300.4315 S	Blatt-Nr.	
SMPC / XPC	reg. i. V 300.1000 V	erste Z. 300.1000		v. Bl.

Für diese Zeichnung behalten wir uns alle Rechte vor.
ROHDE&SCHWARZ

| Zeichn.-Nr. | | |

Ansicht und Leitungsführung Bauteilseite
View of tracks on component side

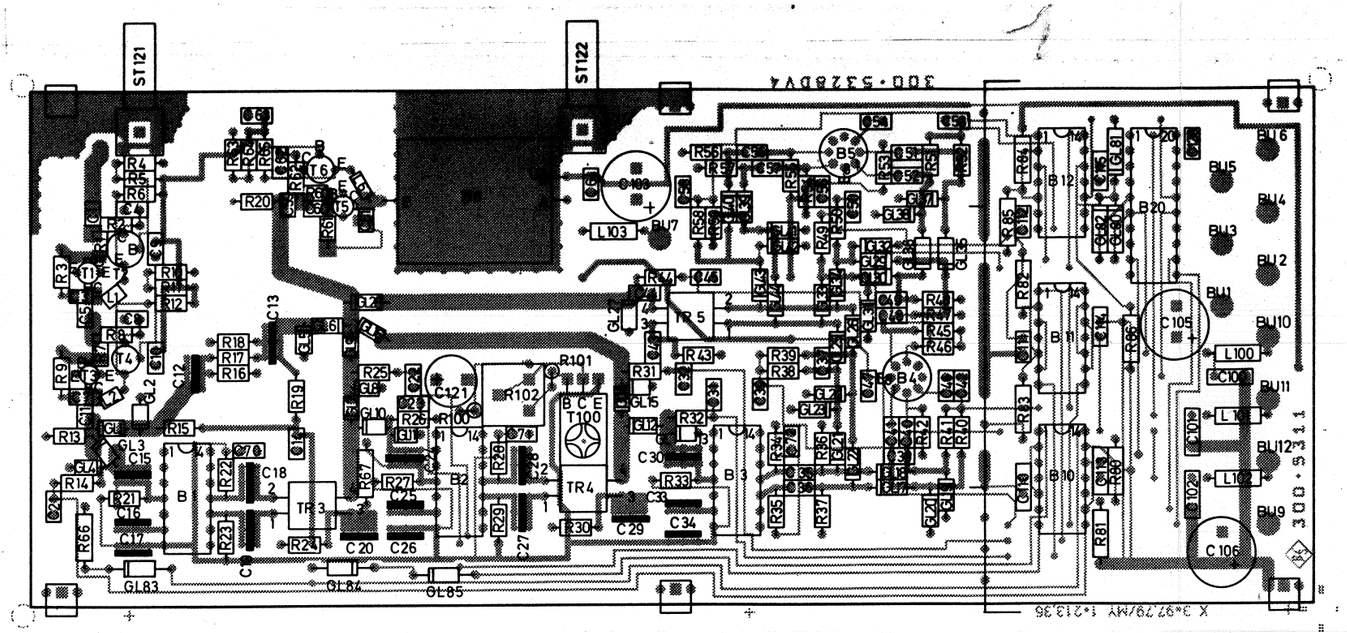

Ansicht und Leitungsführung Lötseite
View of tracks on solder side

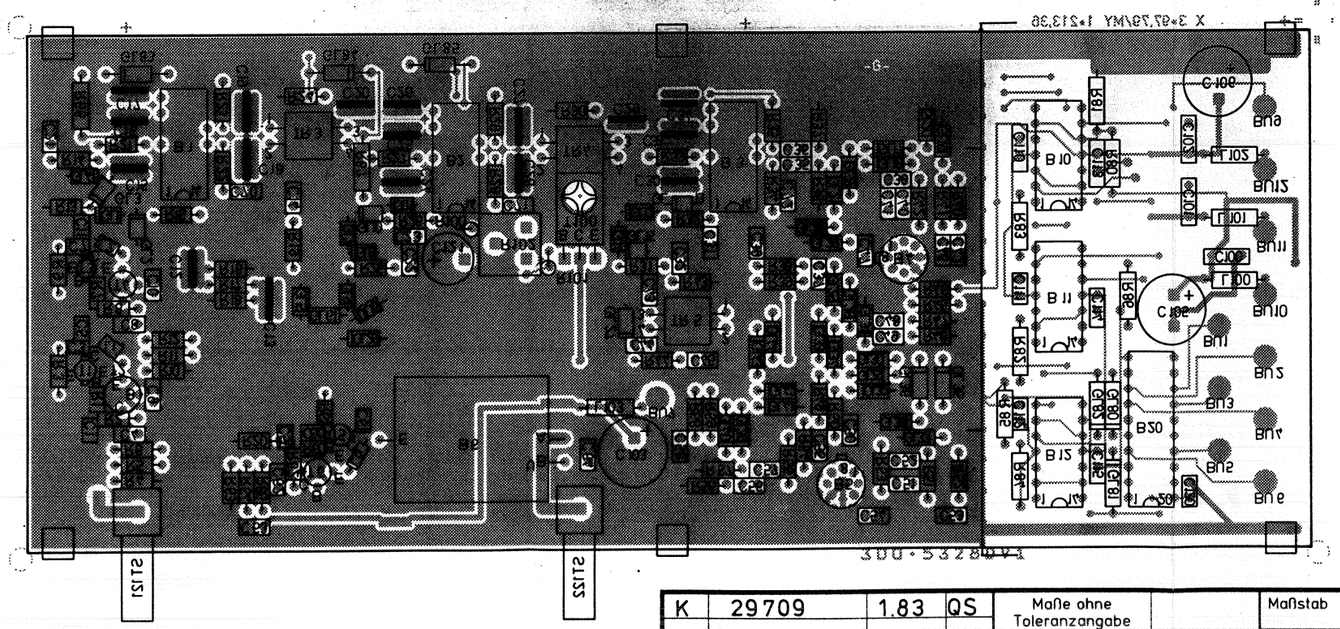

K	29709	1.83	QS
Änd. Zust.	Änderungs-Mitteilung	Tag	Name

Maße ohne Toleranzangabe

Maßstab 1 : 1

Halbzeug, Werkstoff

	Tag	Name
Bearb.	1.83	QS
Gepr.		
Norm		

Benennung: Ausgangsoszillator II

Z

ROHDE & SCHWARZ

zu Gerät SMPC / XPC

Zeichn.-Nr 300.5311

Blatt-Nr. 2

v Bl.

reg. V 300.1000V

erste Z 300.4315

Für diese Unterlage behalten wir uns alle Rechte vor.

ISO-Projektion Methode E

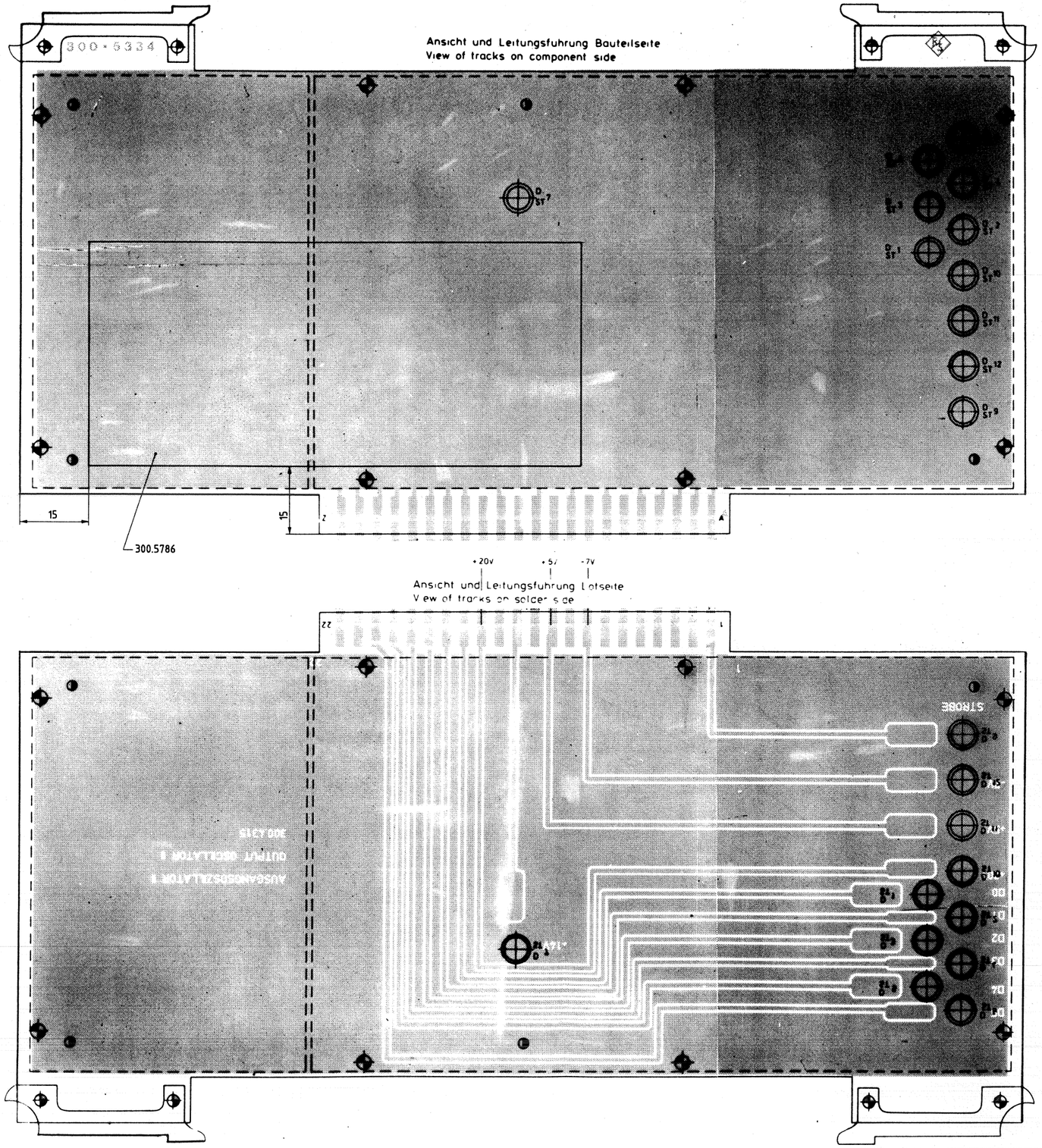

0 1 2 3
ZENTIMETER

A		7.12.78	Wm
		7.8.79	La
B	31341	2.7.84	GS

Maßstab 2 : 1

Halbzeug-Werkstoff

IGME Tag 7.12.78 Wm

Zufuhrung-Ausgangsosz II Z
Feed-output oscillator II

ROHDE & SCHWARZ

Zeichnung Nr. 300.5334

Blatt Nr. 2

Zu Gerät SMPC

reg. V 300.1000 V erste Z

ROHDE&SCHWARZ

SERVICE INSTRUCTIONS

Oscillator Control

355.9619 (Y10)

Table of Contents

		Page
5	Service Instructions for Oscillator Control 355.9619 (Y10)	5.1
5.1	Circuit Description	5.1
5.1.1	Data Transfer and Oscillator Selection	5.1
5.1.2	Setting Voltage Output	5.2
5.1.3	16-bit Frequency Counter	5.2
5.1.4	PLL Working Point Monitor	5.2
5.2	Checking and Adjusting	5.3
5.2.1	Adjusting the PLL Working Point Monitor	5.3
5.2.2	Functional Checks	5.3
5.2.2.1	Signature Analysis Test	5.3
5.2.2.2	Program Test	5.5
5.2.2.2.1	D/A Converter Output Test	5.5
5.2.2.2.2	Window Comparator Test	5.5
5.2.2.3	Frequency Divider Test	5.6
5.3	Troubleshooting	5.7
5.3.1	Setting Voltage and Oscillator Selection	5.7
5.3.1.1	Correction Cycles, Switching-in PLL	5.7
5.3.2	Setting Voltage Fault	5.8
5.3.3	Frequency Remeasurement and Correction Fault	5.9
5.3.4	Interfaces	5.10
5.3.4.1	Analog Interface	5.10
5.3.4.2	Digital Interface	5.11

Parts list
Circuit diagram
Components location plans

5 Service Instructions for Oscillator Control 355.9619 (Y10)

5.1 Circuit Description

(see circuit diagram 355.9619 S and block diagram 5-1)

Y8 contains three output oscillators, which cover the frequency range 680 to 1360 MHz (also refer to the description of Output Oscillator I (Y8) and PLL (Y11)). These oscillators are held by a phase control loop on the harmonics of a 20 to 20.58 MHz reference frequency. Since the phase control only has a bandwidth of about 100 kHz, the corresponding oscillator must be selected by the Oscillator Control and precisely set on the correct 20-MHz spot frequency so that it can be captured by the PLL.

The Oscillator Control consists of the following circuit groups:

a microcomputer unit: with the single component 8-bit microcomputer 8748, an 8-bit output latch, an 8-bit input latch and the 16-bit input/output expander 8243.

a precise 12-bit setting voltage output unit.

a frequency counter with a 16-bit resolution.

a working point monitor for the PLL.

Further details are given for these circuit groups in the block diagram 5-1.

5.1.1 Data Transfer and Oscillator Selection

The Processor (Y1) transfers three data bytes to the Oscillator Control. The first byte gives the correct 20-MHz spot frequency (34th to 68th harmonic) and data for the bandwidth of the PLL; the following two data bytes give the frequency data with a 32-kHz resolution. In the undivided octave 680 to 1360 MHz, the frequency data D_{OS} is given by:

$$D_{OS} = \frac{f(kHz)}{32} \text{ (range 21250 to 42500)}$$

Example: 978 MHz input

$$D_{OS} = \frac{978000}{32} = 30562, \text{ thus}$$

2nd byte = 77 H, 3rd byte = 62 H.

From the frequency data, the Oscillator Control determines which of the three oscillators is suitable and what the setting-voltage should be.

The oscillator ranges are:

680 to 912	MHz	oscillator 1
912 to 1144	MHz	oscillator 2
1144 to 1360	MHz	oscillator 3

The range switchover boundaries have a hysteresis of 3 MHz.

5.1.2 Setting Voltage Output

From the data bytes and by use of a stored voltage/frequency table, the microcomputer calculates the setting voltage. The result is converted into a voltage of between 0.5 and 8 V by a D/A converter. As the setting-voltage not only must have a very low noise level so that the spectral purities of the oscillators are not affected but also must be very quick to reach the required level, a switchable filter follows the D/A converter. After outputting the data, the microcomputer switches the filter from 100 kHz to 3 Hz bandwidth. Following the filter is an amplifier which has a gain of two to ensure that a sufficient voltage swing is available for the oscillators. A further filter is connected to the amplifier to reduce its wideband noise.

5.1.3 16-bit Frequency Counter

After the setting voltage has been output, the frequency is measured with a 16-bit counter. The oscillator frequency is fed to the counter, after being divided by 32, by a decoupling amplifier. The gate time of the counter is derived from the reference frequency of the PLL circuit (see block diagram). The microcomputer starts the counting procedure and the gate time ends the measurement. The result of the count is read by the microcomputer via the 8243 input/output expander. After comparing the set frequency with the output frequency, a corrected setting voltage is output. The frequency is then remeasured and, if necessary, corrected again. When there is a frequency difference of less than 600 kHz, the microcomputer switches in the phase control and informs the Processor via the interrupt line. Thereafter, the microcomputer monitors the working point of the PLL.

5.1.4 PLL Working Point Monitor

To ensure that the detector operates in the middle of its characteristic, the setting voltage must compensate for any variation (for instance, temperature drift, etc.). The window comparator B31 monitors the working point of the pase detector and gives a signal if the limits of the window are exceeded. The microcomputer then outputs the correspondingly opposing voltage in order to keep the working point within the window.

5.2 Checking and Adjusting

5.2.1 Adjusting the PLL Working Point Monitor

The subassemblies Y1, Y4, Y5, Y6, Y7, Y8, Y10, Y11, Y19 and Y25 must be fitted in the unit and are to be in working order.

a) Key in a periodic sweep from 680 to 1360 MHz in 2 MHz steps.

b) Remove cable K15 from subassembly Y11 (PLL).

c) Adjust the voltage at test point (MP) 43 on Y10 to an average value of 7 ±1 V with the resistor R34 during the sweep operation.

d) Reconnect cable K15 to subassembly Y11.

e) With all frequency settings, the voltage at testpoint (MP) 43 must be a value between +2 V and +12 V (lower and upper level of temperature window) after a few seconds.

5.2.2 Functional Checks

The functions of the assembly can be checked by three different tests:

- signature analysis test,
- program test,
- frequency divider test.

5.2.2.1 Signature Analysis Test

Setup on Y1: replace B10 with a test EPROM Id. No. 337.9904 (included in the Service Kit XPC-Z1)

Setting the signature analyzer: START EDGE: ↓
STOP EDGE: ↑
CLOCK EDGE: ↓

- connect the analyzer connector to plug (ST) 44.
  The following pin connections apply:
  1 - GND, 2 - CLOCK, 3 - STOP, 4 - START.

- switch on unit. The signature analysis test program is called up by keying [LEV / µV]. The display indicates: OS SA

A complete list of the subassembly's relevant signatures is given in Table 5-1. The microcomputer (B44) and the output latch (B46) are tested by the analysis.

Table 5-1 Signature Analysis of Oscillator Control

Chip		Measured signature -Z2-	-Z4-	-Z5-	-Z6-
B44, PIN 21	P20	11FO	5AC8	7F03	H6HU
22	P21	ACF4	60HP	UFAH	CHFC
23	P22	53P1	P964	4UH7	97A0
24	P23	A47P	6691	095P	COF1
28	P11	0655	9FC0	7AUP	9AHP
29	P12	6529	0674	AHA7	FPFC
30	P13	4752	CFC3	P404	21HB
31	P14	4C72	F877	96F5	9H51
32	P15	3C62	225P	F451	208F
33	P16	62UU	A4A0	001H	2298
34	P17	7U2C	H08P	4129	H232
35	P24	P540	PU37	8A24	A284
36	P25	F5U3	CH2C	A217	18PH
37	P26	UU9A	41UP	3A6A	30PU
38	P27	5761	1FU8	52H4	64P6
B46, PIN 2		A11F	55AC	27F0	4H6H
5		FACF	960H	5UFA	5CHF
6		A53P	FP96	C4UH	H97A
12		6P54	0PU3	H8A2	AA28
15		6F5U	4CH2	8A21	118P
16		5UU9	941U	03A6	530P

5.2.2.2 Program Test

The program of the Oscillator Control contains test routines with which the D/A converter output, the input and output latches and the window comparator can be checked.

The test routines can be called up on the front panel of the XPC/SMPC and specific data words can be output to the Oscillator Control.

Setup on Y1:

- replace B10 with a test-EPROM,
- switch on unit.

After switching on, the display indicates the selected IEC-bus address.

5.2.2.2.1 D/A Converter Output Test

The corresponding test program is called up by keying [LEV dBm].
The display indicates: OS dA
and the main processor transfers the data word Ø2H to the Oscillator Control. This bit pattern remains present on the data bus. In the Oscillator Control, the output filter is switched to fast and a periodic sawtooth voltage of 0 to 17 V is output from the setting voltage output ST133.

5.2.2.2.2 Window Comparator Test

The window comparator test is called up by keying [LEV mV].
The display indicates: OS Fd
and the main processor now transfers the data word Ø4H to the Oscillator Control.

For this test, a DC voltage is fed into the PLL monitor input ST134. If the value of the DC voltage is within the range of the window V_O ±20 mV, a DC voltage of 10 V is then present at the setting voltage output ST133. If the voltage is greater than or less than the window range, then +17 V or 0 V, respectively, is present at ST133. The centre of the window V_O can be set between 0.3 V and 1 V with R34.

The upper threshold of the window comparator B31 at B31.8 is 12 V, the lower is 2 V.

5.2.2.3 Frequency Divider Test

Setup on Y10:

- plug short circuit connector 45 to terminals 2-3.
- remove short circuit connector 100 and connect a frequency counter (100 MHz) or an oscilloscope to connector 100.1.
- switch the XPC/SMPC on.
- feed 680 to 1360 MHz at -10 dBm into ST132 with a signal generator.

Check the operation of the frequency divider across the complete frequency range with the oscilloscope or frequency counter. The input frequency divided by 32 is measured at ST100.1. Repeat the test at levels of -7 and -13 dBm.

5.3 Troubleshooting

(see Processor Y1 for signature analysis)

A faulty function of subassembly Y10 is indicated in the display by the fault signal "5".

5.3.1 Setting Voltage and Oscillator Selection

- Remove cable K11 from Y10. Key into the XPC/SMPC a sweep from 680 to 1360 MHz in 2000 kHz steps. A sawtoothed setting voltage of 3 to 15 V for the oscillators should then be present at ST133. The appropriate oscillators are selected by the output latch B46 (see digital interface).

- if the setting voltage is not correct, see 5.3.2.

- if the oscillators are not correctly selected, check output latch B46 with signature analysis (5.2.2.1).

- if the setting voltage and oscillator selection are correct, reconnect cable K11 to Y10.

5.3.1.1 Correction Cycles, Switching-in PLL

After outputting the setting voltage, the Oscillator Control measures the frequency from Output Oscillator I and corrects the tuning voltage as required. This correction should be < 1 V (typically 300 mV). After further measurements of the frequency, additional corrections are made as necessary. After 2 to 3 cycles, the PLL is switched in (B46.2 to H). If the correction sequence is not accurate, see 5.3.3.

- if the output oscillator does not synchronize even though the setting voltage is correct after 1 to 4 correction cycles, check the PLL (Y11).

- if the output oscillator drops out of synchronization after 1 to 10 seconds, check the setting of the working point of the PLL (5.2.1).

- if the working point is correct, check the operation of the working point monitor (5.2.2.2.2).

5.3.2 Setting Voltage Fault

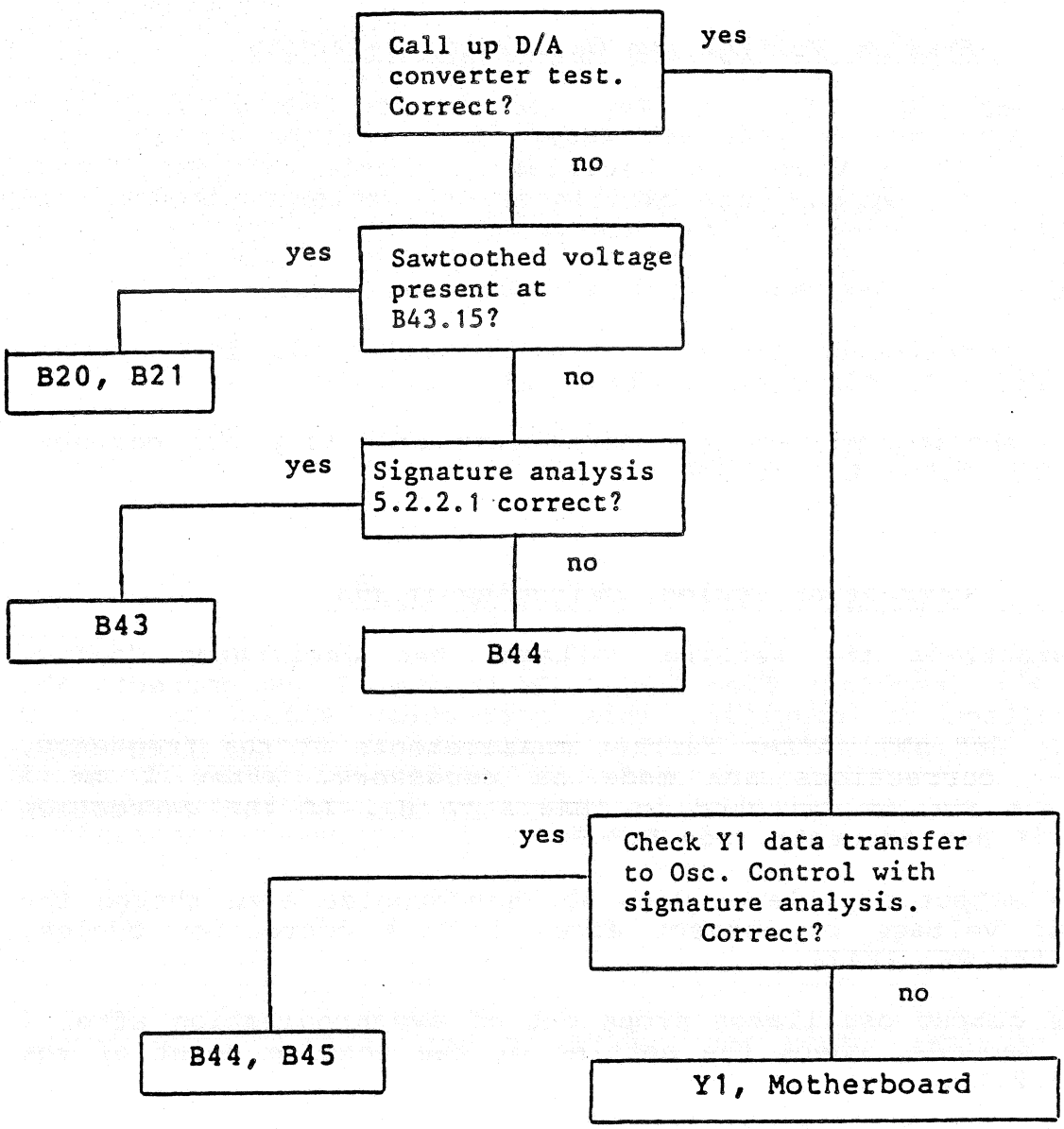

5.3.3 Frequency Remeasurement and Correction Fault

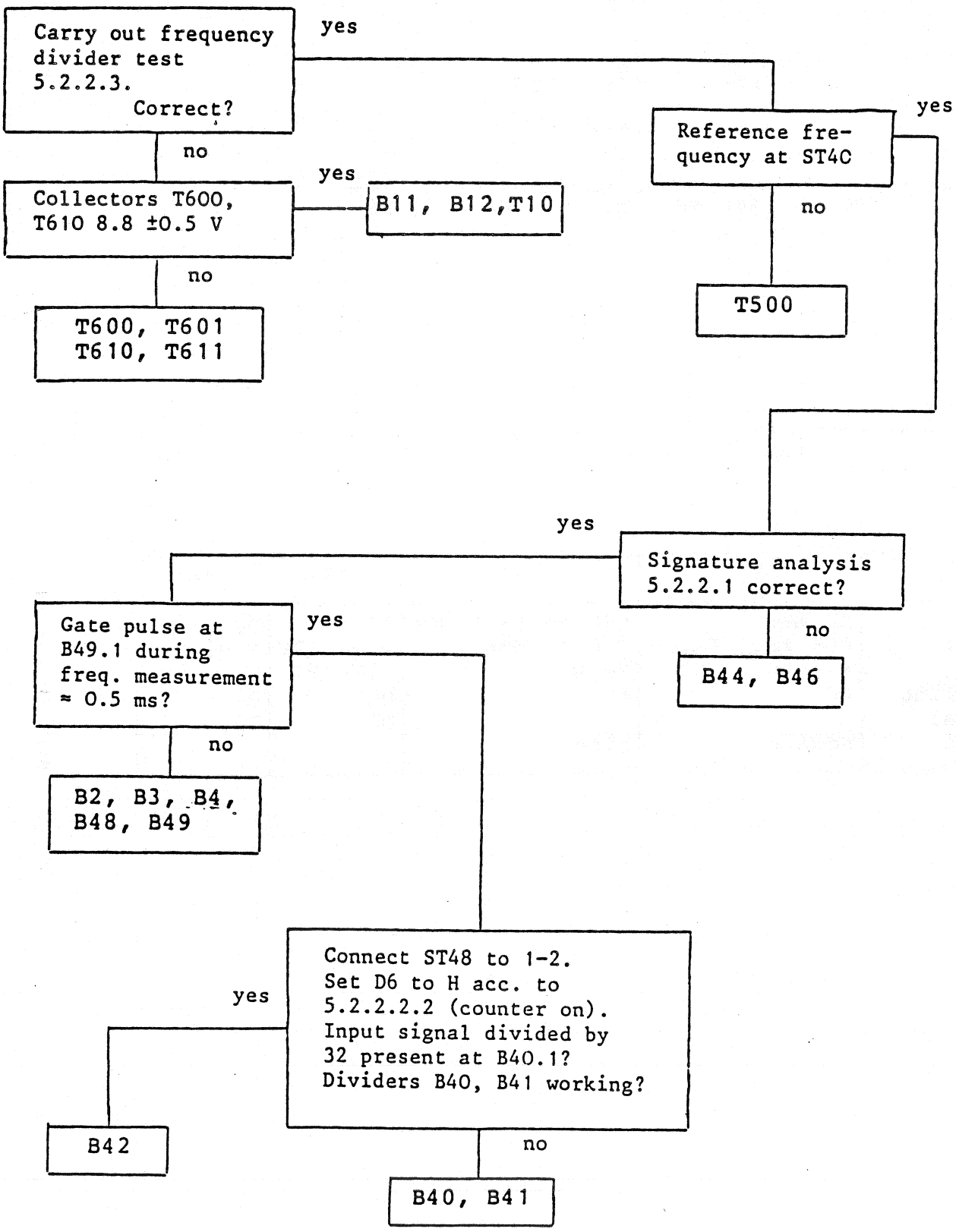

5.3.4 Interfaces

5.3.4.1 Analog Interface

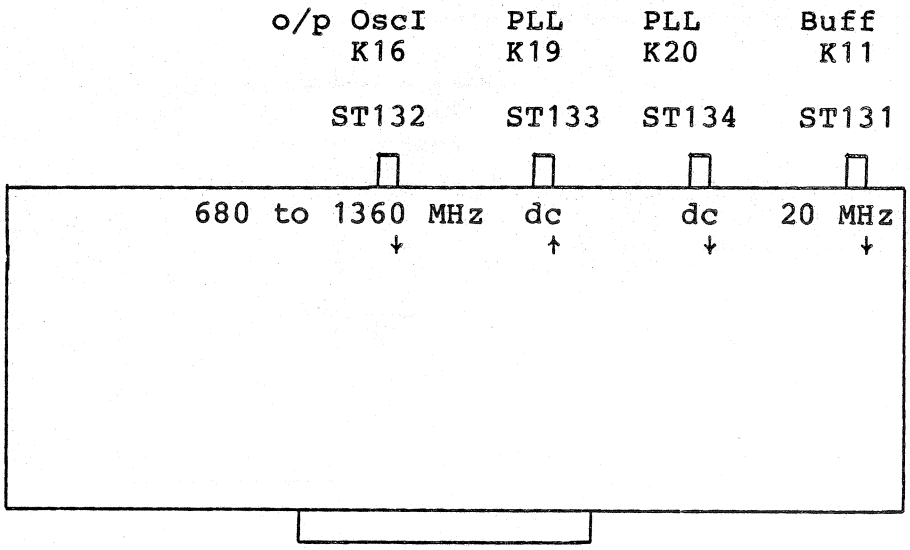

ST/BU	131	132	133	134
f	20 MHz	680 to 1360 MHz	DC	DC
Level	0.5 ±0.1 V_{pp}	-10 ±2 dBm	1 to 17V	≈ 0.5 V
R_i	≈ 1 kΩ	50 Ω	1.25 kΩ	
Coupling	AC	AC	DC	DC
Signal shape	square	sine	DC	DC

5.3.4.2 Digital Interface

Data reception (see 5.1)

Data bus	D7	D6	D5	D4	D3	D2	D1	DØ
ST130	22	21	20	19	18	17	16	15
	MSB ——— data word ——— LSB							

Control lines

ST130	Function	L	H
A	$\overline{\text{RESET}}$	active	passive
13	PLL switch	off	on
D	Oscillator 1	off	on
5	" 2	off	on
7	" 3	off	on
9	PLL loop bandwidth	narrow	wide
11	Interrupt	passive	active

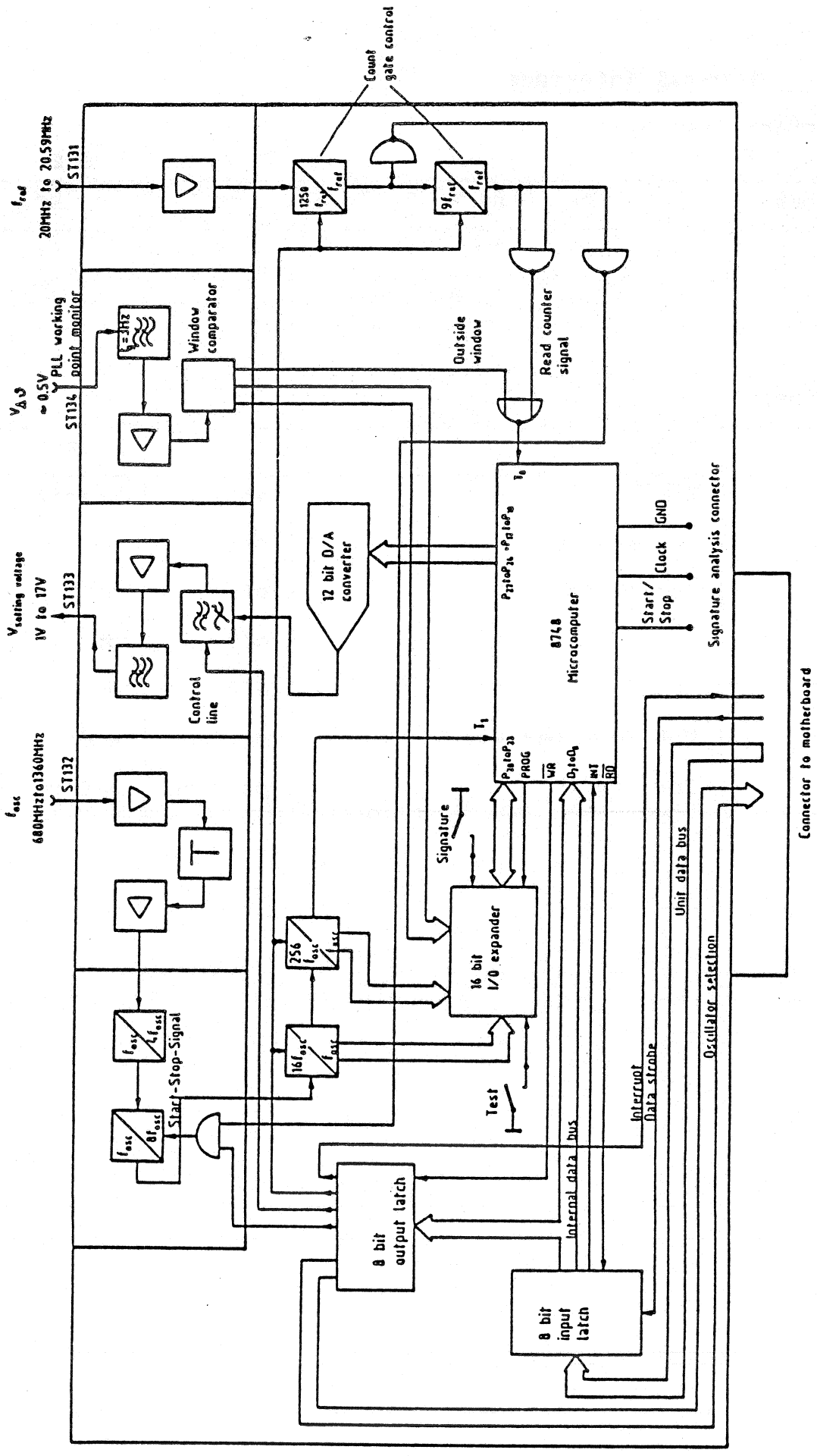

Fig. 5-1 Oscillator Control block diagram

ROHDE & SCHWARZ
MÜNCHEN

Schaltteillisten
Stromläufe
Bestückungspläne

Parts lists
Circuit diagrams
Components plans

R 29500 Bl. 2

ROHDE&SCHWARZ	ÄZ	Datum / Date	Schaltteilliste für / Parts list for	Sachnummer / Stock No.	Blatt / Page
	09	0686	ZE OSZILLATORSTEUERUNG OSCILLATOR-CONTROL	355.9619.00 SA	1

Kennzeichen Component No.	Benennung/Beschreibung Designation	Sachnummer Stock No.	enthalten in contained in
B2	BL SN74LS390N 2XDEC.COUNT IC DECADE COUNTER SN74LS3 TEXAS SN74LS390N	300.6760	355.9625
B3	BL SN74LS390N 2XDEC.COUNT IC DECADE COUNTER SN74LS3 TEXAS SN74LS390N	300.6760	355.9625
B4	BL SN74LS293N 4BIT-ZAEHL. IC BIT-COUNTER SN74LS293N TEXAS SN74LS293N	291.4341	355.9625
B11	BL SP8619BDC 4:1DIVID UHF DIVIDER PLESSEY SP8619BDC	BL 300.6160	355.9625
B12	BL SP8735BDC 8:1DIVID UHF DIVIDER PLESSEY SP8735BDC	BL 300.6176	355.9625
B20	BJ DG300BP 2X ANALOGSCH ANALOG SWITCH SILICONIX DG300BP	BJ 300.9375	355.9625
B21	BO LF156H BIFET OPAMP OPERATIONAL AMPLIFIER MOTOROLA LF156H	BO 333.5862	355.9625
B30	BO UA741MJG OPAMP OPERATIONAL AMPLIFIER TEXAS UA741MJG	BO 275.0822	355.9625
B31	BO TCA965 FENSTER-DISKRIM DISCRIMINATOR SIEMENS TCA965	BO 279.2213	355.9625
B40	BL SN74197N ZAEHLER 50MHZ IC COUNTER SN74197N TEXAS SN74197N	443.2973	355.9625
B41	BL SN74LS393N 2XBIN.ZAEHL IC 2XBIN.COUNT.SN74LS393N TEXAS SN74LS393N	300.6982	355.9625
B42	BC P8243 4X4B.I/O-EXP I/O-EXPANDER INTEL P8243	BC 334.3270	355.9625
B43	BJ DAC80CBIV 12B.D/A-CONV D/A-CONVERTER BURR-BROWN DAC80CBI-V	291.5131	355.9625
B44	BC 8748,UP+EPROM.PROGR.1 CPU+EPROM	355.9677	355.9625
B45	BC P8212 8B.I/O LATCH I/O PORT INTEL P8212	335.8946	355.9625
B46	BL SN74LS273N 8BIT-D-REG. 8BIT-D-REGISTER TEXAS SN74LS273N	214.8998	355.9625
B47	BL SN74LS02N 4/2INP.NOR IC NOR GATE SN74LS02N TEXAS SN74LS02ON	266.4658	355.9625
B48	BL SN7405N O+70 HEXINV IC HEX INVERTER SN7405N TEXAS SN7405N	BL 009.3460	355.9625
B49	BL SN74LS01N 4X2INP.NANDG IC NAND GATE SN74LS01N TEXAS SN74LS01N	274.9084	355.9625
		355.9619.00 SA	BL 1+

Für diese Unterlage behalten wir uns alle Rechte vor

Kennzeichen Component No.	Benennung/Beschreibung Designation	Sachnummer Stock No.	enthalten in contained in
BU1	FP BUCHSE VERTIKAL P.V.1P SOCKET BERG 75377-001	FP 278.5577	355.9625
BIS/TO BU21			
BU40	FP KURZSCHLUSSBUCHSE SHORTING PLUG PK 452-70302	FP 491.7042	355.9625
BU41	FP KURZSCHLUSSBUCHSE SHORTING PLUG PK 452-70302	FP 491.7042	355.9625
BU42	FP KURZSCHLUSSBUCHSE SHORTING PLUG PK 452-70302	FP 491.7042	355.9625
BU45	FP KURZSCHLUSSBUCHSE SHORTING PLUG PK 452-70302	FP 491.7042	355.9625
BU47	FP KURZSCHLUSSBUCHSE SHORTING PLUG PK 452-70302	FP 491.7042	355.9625
BU48	FP KURZSCHLUSSBUCHSE SHORTING PLUG PK 452-70302	FP 491.7042	355.9625
BU49	FP KURZSCHLUSSBUCHSE SHORTING PLUG PK 452-70302	FP 491.7042	355.9625
BU100	FP KURZSCHLUSSBUCHSE SHORTING PLUG PK 452-70302	FP 491.7042	355.9625
C10	CC 10 PF+-10%100V NPO C CERAMIC CAPACITOR VITRAMON VJ1005A100KFB	CC 022.4473	355.9625
C11	CC 1,2NF+-10%100V3K1200 C CAPACITOR VITRAMON VJ1005Y122KFB	CC 082.3238	355.9625
C12	CC 1NF+-10%100V3K1200CHIP CAPACITOR VITRAMON VJ1005Y102KFB	CC 082.3221	355.9625
C13	CC 1NF+-10%100V3K1200CHIP CAPACITOR VITRAMON VJ1005Y102KFB	CC 082.3221	355.9625
C20	CK 220NF+-5%63V5RM MKT CAPACITOR WIMA MKS2/63/0,22UF/5%	CK 099.2952	355.9625
C21	CK 68NF+-5%63V5RM MKT CAPACITOR WIMA MKS2/63/0,068UF/5%	CK 099.2923	355.9625
C22	CC 33NF+-10%50V5K1200VIEL CERAMIC CAPACITOR UNION CARB CK05BX333K	CC 084.5315	355.9625
C23	CC 1,5NF+-10%4X5R2000 CAPACITOR VALVO 2222 63051 152	CC 087.7048	355.9625
C30	CE 22UF-10+50% 16V 9X13B ELECTROLYTIC CAPACITOR ROEDERST ELKO 22/16	CE 086.4368	355.9625

uns alle Rechte vor

Kennzeichen Component No.	Benennung/Beschreibung Designation	Sachnummer Stock No.	enthalten in contained in
C31	CC 22 NF+-20%100V K6000VI CAPACITOR ERIE 8123-100Z5U-223-M	060.1303	355.9625
C32	CC 4,7NF+-10%6X9R2000 CAPACITOR VALVO 2222 63051 472	CC 087.7102	355.9625
C40	CC 10NF-20+50%7X8R6000 CAPACITOR VALVO 2222 63051 64051103	CC 087.7525	355.9625
C41	CE 1UF -10+50% 63V 9X13 ELECTROLYTIC CAPACITOR ROEDERST ELKO EK 1/63	CE 022.7620	355.9625
C42	CE 1UF -10+50% 63V 9X13 ELECTROLYTIC CAPACITOR ROEDERST ELKO EK 1/63	CE 022.7620	355.9625
C43	CE 1UF -10+50% 63V 9X13 ELECTROLYTIC CAPACITOR ROEDERST ELKO EK 1/63	CE 022.7620	355.9625
C44	CC 10PF+-0,25PF5X6P100 CAPACITOR VALVO 2222 678 03109	CC 087.6293	355.9625
C45	CC 10PF+-0,25PF5X6P100 CAPACITOR VALVO 2222 678 03109	CC 087.6293	355.9625
C46	CC 4,7NF+-10%6X9R2000 CAPACITOR VALVO 2222 63051 472	CC 087.7102	355.9625
C48	CC 10NF-20+50%7X8R6000 CAPACITOR VALVO 2222 63051 64051103	CC 087.7525	355.9625
C49	CC 10NF-20+50%7X8R6000 CAPACITOR VALVO 2222 63051 64051103	CC 087.7525	355.9625
C51	CC 4,7NF+-10%6X9R2000 CAPACITOR VALVO 2222 63051 472	CC 087.7102	355.9625
C52	CC 4,7NF+-10%6X9R2000 CAPACITOR VALVO 2222 63051 472	CC 087.7102	355.9625
C54	CC 4,7NF+-10%6X9R2000 CAPACITOR VALVO 2222 63051 472	CC 087.7102	355.9625
C55	CC 4,7NF+-10%6X9R2000 CAPACITOR VALVO 2222 63051 472	CC 087.7102	355.9625
C56	CC 10NF-20+50%7X8R6000 CAPACITOR VALVO 2222 63051 64051103	CC 087.7525	355.9625
C74	CC 82PF+-2%6X7NP0 CAPACITOR VALVO 2222 678 10829	CC 087.6535	355.9625
C100	CE 1,0UF+-20%35V 5X 4X 7 ELECTROLYTIC CAPACITOR ERO-TANTAL TA-ELKOETR1-1/35	CE 022.8185	355.9625
C101	CC 1NF+80-20%R4000 TRAP CERAMIC CAPACITOR DRALORIC TRE7L0E1000/2080%R40	CC 086.7515	355.9625

Für diese Unterlage behalten wir uns alle Rechte vor

Kennzeichen Component No.	Benennung/Beschreibung Designation	Sachnummer Stock No.	enthalten in contained in
C102	CC 4,7NF+-10%100V3K1200 C CAPACITOR VITRAMON VJ1005Y472KFB	CC 082.3309	355.9625
C103	CC 4,7NF+-10%100V3K1200 C CAPACITOR VITRAMON VJ1005Y472KFB	CC 082.3309	355.9625
C201	CC 10NF-20+50%7X8R6000 CAPACITOR VALVO 2222 63051 64051103	CC 087.7525	355.9625
C202	CC 10NF-20+50%7X8R6000 CAPACITOR VALVO 2222 63051 64051103	CC 087.7525	355.9625
C204	CC 10NF-20+50%7X8R6000 CAPACITOR VALVO 2222 63051 64051103	CC 087.7525	355.9625
C205	CC 10PF+-0,25PF5X6P100 CAPACITOR VALVO 2222 678 03109	CC 087.6293	355.9625
C206	CC 10NF-20+50%7X8R6000 CAPACITOR VALVO 2222 63051 64051103	CC 087.7525	355.9625
C300	CC 10NF-20+50%7X8R6000 CAPACITOR VALVO 2222 63051 64051103	CC 087.7525	355.9625
C301	CC 10NF-20+50%7X8R6000 CAPACITOR VALVO 2222 63051 64051103	CC 087.7525	355.9625
C302	CC 10NF-20+50%7X8R6000 CAPACITOR VALVO 2222 63051 64051103	CC 087.7525	355.9625
C500	CC 10NF-20+50%7X8R6000 CAPACITOR VALVO 2222 63051 64051103	CC 087.7525	355.9625
C501	CC 10NF-20+50%7X8R6000 CAPACITOR VALVO 2222 63051 64051103	CC 087.7525	355.9625
C502	CC 10NF-20+50%7X8R6000 CAPACITOR VALVO 2222 63051 64051103	CC 087.7525	355.9625
C540	CE 100UF-10+50% 16V 9X13 ELECTROLYTIC CAPACITOR ROEDERST EK 00CB 310 D	CE 006.7165	355.9625
C550	CE 10UF -10+50% 63V 9X13 ELECTROLYTIC CAPACITOR ROEDERST ELKOEK10/63	CE 022.7650	355.9625
C600	CC 27PF+-10%100V3NPO CHIP CAPACITOR VITRAMON VJ1005A270KFB	CC 082.3038	355.9625
C601	CC 4,7PF+-0,5PF100V3NPO C CAPACITOR VITRAMON VJ1005A4R7DFB	CC 082.2977	355.9625
C602	CC 10NF+-10% 50V3K1200 CH CAPACITOR VITRAMON VJ1005Y103KFB	CC 082.3344	355.9625
C603	CC 27PF+-10%100V3NPO CHIP CAPACITOR VITRAMON VJ1005A270KFB	CC 082.3038	355.9625

uns alle Rechte vor

Kennzeichen Component No.	Benennung/Beschreibung Designation	Sachnummer Stock No.	enthalten in contained in
C604	CC 1NF+80-20%R4000 TRAP CERAMIC CAPACITOR DRALORIC TRE7L0E1000/2080%R40	CC 086.7515	355.9625
C605	CC 10NF-20+50%7X8R6000 CAPACITOR VALVO 2222 63051 64051103	CC 087.7525	355.9625
C610	CC 27PF+-10%100V3NP0 CHIP CAPACITOR VITRAMON VJ1005A270KFB	CC 082.3038	355.9625
C611	CC 4,7PF+-0,5PF100V3NP0 C CAPACITOR VITRAMON VJ1005A4R7DFB	CC 082.2977	355.9625
C612	CC 10NF+-10% 50V3K1200 CH CAPACITOR VITRAMON VJ1005Y103KFB	CC 082.3344	355.9625
C613	CC 27PF+-10%100V3NP0 CHIP CAPACITOR VITRAMON VJ1005A270KFB	CC 082.3038	355.9625
C614	CC 1NF+80-20%R4000 TRAP CERAMIC CAPACITOR DRALORIC TRE7L0E1000/2080%R40	CC 086.7515	355.9625
C615	CC 10NF-20+50%7X8R6000 CAPACITOR VALVO 2222 63051 64051103	CC 087.7525	355.9625
D1	LD 35DB/200M-10GHZ PI-FIL CHOKE ERIE 1214-038	LD 300.6818	355.9648
BIS/TO D21			
GL1	AD 1N4448 75V 0,15A UDI DIODE VALVO 1N4448	AD 012.0700	355.9625
GL2	AD 1N4448 75V 0,15A UDI DIODE VALVO 1N4448	AD 012.0700	355.9625
GL11	AE BZX79/C5V1 0,5W Z-DI ZENER DIODE VALVO BZX79/C5V1	AE 012.2449	355.9625
L26	LD 10,0UH10%3,300HM0,144A CHOKE DELEVAN DROSSEL1025-44	LD 026.4184	355.9625
L27	LD 1000UH10%72,00HM0,028A CHOKE DELEVAN DROSSEL1025-92	LD 037.8005	355.9625
L600	ENTHALTEN IN/INCLUDED IN LEITERPLATTE/PCB		355.9625
L601	LD SPULE COIL	300.9400	355.9625
L610	ENTHALTEN IN/INCLUDED IN LEITERPLATTE/PCB		355.9625
L611	LD SPULE COIL	300.9400	355.9625

Für diese Unterlage behalten wir uns alle Rechte vor

Kennzeichen Component No.	Benennung/Beschreibung Designation	Sachnummer Stock No.	enthalten in contained in
Q1	EQ 6,000 MHZ CL30PF HC43U CRYSTAL 6,000MHZ KRISTALLVE N. R&S SACHNUMMER	EQ 302.7186	355.9625
R1	RL 0,35W 1KOHM+-1%TK50 RESISTOR DRALORIC SMA0207/1K-F-C	RL 082.2160	355.9625
R2	RL 0,35W 1KOHM+-1%TK50 RESISTOR DRALORIC SMA0207/1K-F-C	RL 082.2160	355.9625
R3	RL 0,35W 1KOHM+-1%TK50 RESISTOR DRALORIC SMA0207/1K-F-C	RL 082.2160	355.9625
R4	RL 0,35W 1,82KOHM+-1%TK50 RESISTOR DRALORIC SMA0207/1,82K-F-C	RL 082.2277	355.9625
R5	RL 0,35W 1,82KOHM+-1%TK50 RESISTOR DRALORIC SMA0207/1,82K-F-C	RL 082.2277	355.9625
R10	RL 0,35W 10,0KOHM+-1%TK50 RESISTOR DRALORIC SMA0207/10K-F-D	RL 083.1297	355.9625
R11	RL 0,21W 619 OHM+-1%TK50 RESISTOR 619 OHMS RESISTA MK1 6190HM 1% TK50	092.0225	355.9625
R12	RL 0,35W 30,1KOHM+-1%TK50 RESISTOR DRALORIC SMA0207/30,1K-F-C	RL 083.1639	355.9625
R13	RL 0,35W 619 OHM+-1%TK50 RESISTOR DRALORIC SMA0207/6190HM-F-D	RL 083.0478	355.9625
R14	RL 0,35W 1,82KOHM+-1%TK50 RESISTOR DRALORIC SMA0207/1,82K-F-C	RL 082.2277	355.9625
R15	RL 0,35W 4,75KOHM+-1%TK50 RESISTOR DRALORIC SMA0207/4,75K-F-D	RL 083.1097	355.9625
R16	RL 0,35W15 OHM 1%TK50 RESISTOR DRALORIC SMA0207/150HM-F-D	RL 082.9020	355.9625
R17	RL 0,35W 1,21KOHM+-1%TK50 RESISTOR DRALORIC SMA0207/1,21K-F-D	RL 083.0655	355.9625
R18	RL 0,35W 1KOHM+-1%TK50 RESISTOR DRALORIC SMA0207/1K-F-C	RL 082.2160	355.9625
R20	RL 0,35W 68,1KOHM+-1%TK50 RESISTOR DRALORIC SMA 0207/68,1K-F-C	RL 082.2602	355.9625
R21	RL 0,35W 150 KOHM+-1%TK50 RESISTOR DRALORIC SMA/207/150K-F-C	RL 083.2129	355.9625
R22	RL 0,35W27,40 OHM+-1%TK50 RESISTOR DRALORIC SMA0207/27,40HM-F-D	RL 082.9271	355.9625

uns alle Rechte vor

Kennzeichen Component No.	Benennung/Beschreibung Designation	Sachnummer Stock No.	enthalten in contained in
R23	RL 0,35W 1 KOHM+-0,1%TK25 RESISTOR DRALORIC SMA0207/1K-B-E	083.9146	355.9625
R26	RL 0,35W 1 KOHM+-0,1%TK25 RESISTOR DRALORIC SMA0207/1K-B-E	083.9146	355.9625
R28	RL 0,35W 1,21KOHM+-1%TK50 RESISTOR DRALORIC SMA0207/1,21K-F-D	RL 083.0655	355.9625
R29	RL 0,35W 221 OHM+-1%TK50 RESISTOR DRALORIC SMA0207/221OHM-F-D	RL 083.0084	355.9625
R30	RL 0,35W 5,62KOHM+-1%TK50 RESISTOR DRALORIC SMA0207/5,62K-F-C	RL 082.2190	355.9625
R31	RL 0,35W1,21MOHM+-1%TK50 METALFILMRESISTOR RESISTA MK2 1,21MOHM 1% TK50	RL 099.8115	355.9625
R32	RL 0,35W 10,0KOHM+-1%TK50 RESISTOR DRALORIC SMA0207/10K-F-D	RL 083.1297	355.9625
R33	RL 0,35W 2,74KOHM+-1%TK50 RESISTOR DRALORIC SMA0207/2,74K-F-D	RL 083.0926	355.9625
R34	RS 0,5W200 OHM+-10%10X10X CERMET POTENTIOMETER BOURNS 3386X-1-201	RS 247.7949	355.9625
R37	RF 0,25 W 1 KOHM +-2% RESISTOR DRALORIC LCA0207/2%1,00K	028.1524	355.9625
R38	RL 0,35W 4,75KOHM+-1%TK50 RESISTOR DRALORIC SMA0207/4,75K-F-D	RL 083.1097	355.9625
R39	RF 0,25 W 1 KOHM +-2% RESISTOR DRALORIC LCA0207/2%1,00K	028.1524	355.9625
R72	RL 0,35W 1KOHM+-1%TK50 RESISTOR DRALORIC SMA0207/1K-F-C	RL 082.2160	355.9625
R73	RL 0,35W 1KOHM+-1%TK50 RESISTOR DRALORIC SMA0207/1K-F-C	RL 082.2160	355.9625
R74	RL 0,35W 1,82KOHM+-1%TK50 RESISTOR DRALORIC SMA0207/1,82K-F-C	RL 082.2277	355.9625
R76	RL 0,35W 1KOHM+-1%TK50 RESISTOR DRALORIC SMA0207/1K-F-C	RL 082.2160	355.9625
R77	RL 0,35W 1KOHM+-1%TK50 RESISTOR DRALORIC SMA0207/1K-F-C	RL 082.2160	355.9625
R300	RL 0-WIDERSTAND DIN 0204 0-OHM RESISTOR DRALORIC OMA 0204	RL 069.0000	355.9625
R301	RL 0,35W 1KOHM+-1%TK50 RESISTOR DRALORIC SMA0207/1K-F-C	RL 082.2160	355.9625

355.9619.00 SA BL 7+

Für diese Unterlage behalten wir uns alle Rechte vor

Kennzeichen Component No.	Benennung/Beschreibung Designation	Sachnummer Stock No.	enthalten in contained in
R302	RL 0,35W 1KOHM+-1%TK50 RESISTOR DRALORIC SMA0207/1K-F-C	RL 082.2160	355.9625
R500	RL 0,35W 1,82KOHM+-1%TK50 RESISTOR DRALORIC SMA0207/1,82K-F-C	RL 082.2277	355.9625
R501	RL 0,35W 3,32KOHM+-1%TK50 RESISTOR DRALORIC SMA0207/3,32K-F-D	RL 083.0990	355.9625
R502	RL 0,35W 274 OHM+-1%TK50 RESISTOR DRALORIC SMA0207/2740HM-F-D	RL 083.0178	355.9625
R503	RL 0,35W 332 OHM+-1%TK50 RESISTOR DRALORIC SMA0207/3320HM-F-D	RL 083.0255	355.9625
R600	RG 0,125W 33 OHM+-1% CHIP CHIP RESISTOR MSI WA-4 330HM 1% PG-T	337.8214	355.9625
R601	RL 0,21W 180 OHM2% UNGEW. RESISTOR RESISTA MK1 1800HM 2% UNGEW.	RL 092.5985	355.9625
R602	RL 0,21W 1,50KOHM+-1%TK50 RESISTOR RESISTA MK1 1K5 1% TK50	RL 092.1467	355.9625
R603	RL 0,21W 33,2KOHM+-1%TK50 RESISTOR RESISTA MK1 33K2 1% TK50	RL 092.1621	355.9625
R604	RL 0,21W 22,1KOHM+-1%TK50 RESISTOR RESISTA MK1 22K1 1% TK50	RL 092.1609	355.9625
R605	RL 0,21W 150 OHM+-1%TK50 RESISTOR RESISTA MK1 1500HM 1% TK50	RL 092.1344	355.9625
R606	RL 0,21W 33 OHM2% UNGEW. RESISTOR RESISTA MK1 330HM 2% UNGEW.	RL 092.5891	355.9625
R607	RL 0,21W 33 OHM2% UNGEW. RESISTOR RESISTA MK1 330HM 2% UNGEW.	RL 092.5891	355.9625
R608	RL 0,21W 22 OHM2% UNGEW. RESISTOR RESISTA MK1 220HM 2% UNGEW.	RL 092.5879	355.9625
R610	RG 0,125W 33 OHM+-1% CHIP CHIP RESISTOR MSI WA-4 330HM 1% PG-T	337.8214	355.9625
R611	RL 0,21W 180 OHM2% UNGEW. RESISTOR RESISTA MK1 1800HM 2% UNGEW.	RL 092.5985	355.9625
R612	RL 0,21W 1,50KOHM+-1%TK50 RESISTOR RESISTA MK1 1K5 1% TK50	RL 092.1467	355.9625
R613	RL 0,21W 150 OHM+-1%TK50 RESISTOR RESISTA MK1 1500HM 1% TK50	RL 092.1344	355.9625
R650	RL 0,35W 1KOHM+-1%TK50 RESISTOR DRALORIC SMA0207/1K-F-C	RL 082.2160	355.9625

uns alle Rechte vor

Kennzeichen Component No.	Benennung/Beschreibung Designation	Sachnummer Stock No.	enthalten in contained in
R651	RL 0,35W 1KOHM+-1%TK50 RESISTOR DRALORIC SMA0207/1K-F-C	RL 082.2160	355.9625
ST1	FP EINZELKONTAKTSTIFT SINGLE-CONTACT PIN ULMIC R&S.ZCHNG.300.8804	300.8804	355.9648
BIS/TO ST21			
ST40	VL WIRE-WRAP PIN BERG NR. 75 403-001	VL 088.4507	355.9625
ST41	VL WIRE-WRAP PIN BERG NR. 75 403-001	VL 088.4507	355.9625
ST42	VL WIRE-WRAP PIN BERG NR. 75 403-001	VL 088.4507	355.9625
ST44	VL WIRE-WRAP PIN BERG NR. 75 403-001	VL 088.4507	355.9625
ST45	VL WIRE-WRAP PIN BERG NR. 75 403-001	VL 088.4507	355.9625
ST46	VL WIRE-WRAP PIN BERG NR. 75 403-001	VL 088.4507	355.9625
ST47	VL WIRE-WRAP PIN BERG NR. 75 403-001	VL 088.4507	355.9625
ST48	VL WIRE-WRAP PIN BERG NR. 75 403-001	VL 088.4507	355.9625
ST49	VL WIRE-WRAP PIN BERG NR. 75 403-001	VL 088.4507	355.9625
ST100	VL WIRE-WRAP PIN BERG NR. 75 403-001	VL 088.4507	355.9625
ST130	ENTHALTEN IN/INCLUDED IN LEITERPLATTE/PCB		355.9648
ST131	FJ EINBAUWINKELST. SMC ANGLE CONNECTOR RADIALL R 112 669	FJ 249.9684	355.9625
BIS/TO ST134			
T10	AK 2N3209 PNP 20V 100MA TRANSISTOR SGS 2N3209	AK 010.3590	355.9625
T500	AK 2N3209 PNP 20V 100MA TRANSISTOR SGS 2N3209	AK 010.3590	355.9625
T600	AK NE02135 NPN 12V 5GHZ TRANSISTOR NEC NE02135	300.6147	355.9625
T601	AK BCY79IX PNP 45V 200MA TRANSISTOR SIEMENS BCY79IX	AK 010.3777	355.9625
T610	AK NE02135 NPN 12V 5GHZ TRANSISTOR NEC NE02135	300.6147	355.9625
T611	AK BCY79IX PNP 45V 200MA TRANSISTOR SIEMENS BCY79IX	AK 010.3777	355.9625
			- ENDE -

Für diese Unterlage behalten wir uns alle Rechte vor

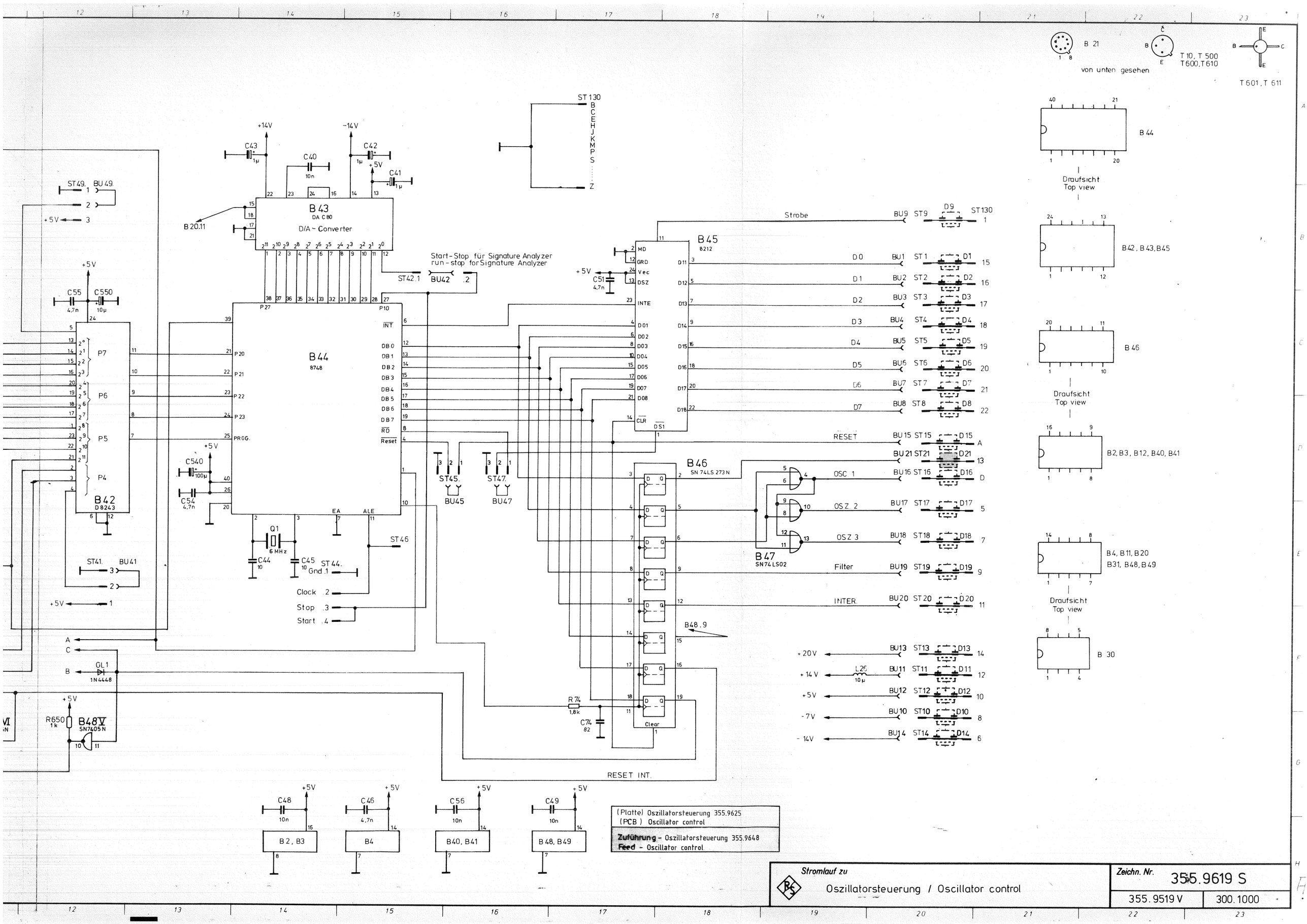

(Platte) Oszillatorsteuerung 355.9625
(PCB) Oscillator control

Zuführung - Oszillatorsteuerung 355.9648
Feed - Oscillator control

Stromlauf zu
Oszillatorsteuerung / Oscillator control

Zeichn. Nr. 355.9619 S

355.9519 V | 300.1000

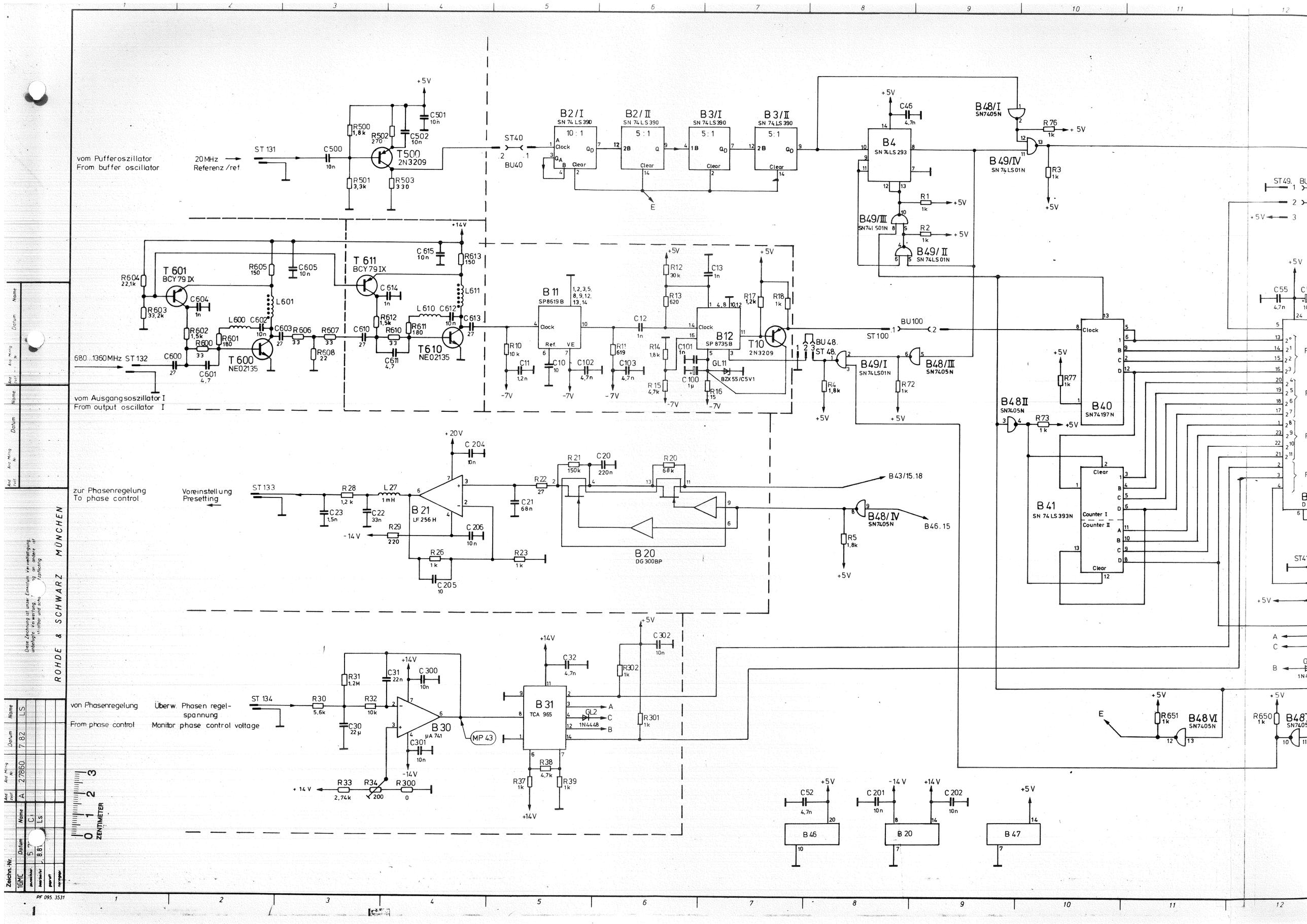

vom Pufferoszillator
From buffer oscillator
20MHz
Referenz /ref
ST 131
C500
10n
R500
1,8k
R502
270
C502
10n
C501
10n
T500
2N3209
R501
3,3k
R503
330
+5V
ST40
BU40
B2/I
SN 74 LS 390
10 : 1
B2/II
SN 74 LS 390
5 : 1
B3/I
SN 74 LS 390
5 : 1
B3/II
SN 74 LS 390
5 : 1
B4
SN 74 LS 293
C46
4,7n
B48/I
SN7405N
R76
1k
B49/IV
SN 74 LS 01N
R3
1k
R1
1k
B49/III
SN74 LS 01N
R2
1k
B49/II
SN 74 LS 01N
ST49.
C55
4,7n
+14V
T 601
BCY 79 IX
R604
22,1k
R603
33,2k
C604
1n
R605
150
C605
10n
L601
T 611
BCY 79 IX
C615
10n
R613
150
C614
1n
L611
R602
1,5k
R600
33
R601
180
L600
C602
10n
C603
27
R606
33
R607
33
R608
22
T 600
NE02135
C600
27
C601
4,7
680...1360MHz ST 132
vom Ausgangsoszillator I
From output oscillator I
C610
27
R612
1,5k
R610
33
R611
180
L610
C612
10n
C613
27
T610
NE02135
C611
4,7
B 11
SP8619 B
R10
10k
C11
1,2n
C10
10
C102
4,7n
C12
1n
R11
619
C103
4,7n
R12
30k
R13
620
C13
1n
R14
1,8k
R15
4,7k
C101
1n
C100
1µ
GL11
BZX 55/C5V1
R16
15
B12
SP 8735 B
R17
1,2k
R18
1k
T10
2N3209
BU 48.
ST 48.
R4
1,8k
B49/I
SN 74 LS 01N
R72
1k
B48/III
SN7405N
BU100
ST 100
B40
SN74197N
R77
1k
B48II
SN7405N
R73
1k
B41
SN 74 LS 393N
Counter I
Counter II
Clear
zur Phasenregelung
To phase control
Voreinstellung
Presetting
ST 133
R28
1,2 k
L27
1mH
C23
1,5n
C22
33n
B 21
LF 256 H
+20V
C 204
10n
R29
220
-14 V
C 206
10n
R26
1k
C205
10
R23
1k
R22
27
C21
68n
R21
150k
C20
220n
R20
68k
B 20
DG 300BP
B43/15.18
B48/IV
SN7405N
B46.15
R5
1,8k
von Phasenregelung
From phase control
Überw. Phasen regel-
spannung
Monitor phase control voltage
ST 134
R30
5,6k
R31
1,2M
C31
22n
C300
10n
R32
10k
C30
22µ
B 30
µA 741
C301
10n
MP 43
+14V
R33
2,74k
R34
200
R300
0
B 31
TCA 965
C32
4,7n
GL2
1N4448
R38
4,7k
R37
1k
R39
1k
C302
10n
R302
1k
R301
1k
R651
1k
B48VI
SN7405N
R650
1k
C52
4,7n
B 46
C 201
10n
C 202
10n
B 20
B 47
ZENTIMETER
0 1 2 3
ROHDE & SCHWARZ MÜNCHEN
Diese Zeichnung ist unser Eigentum. Vervielfältigung, unbefugte Verwertung, Weitergabe an andere ist strafbar und schadenspflichtig
Zeichn.-Nr.
16MC
Datum
Name
A
27860
7.82
LS
PF 095 3531

Ansicht und Leitungsführung Bauteilseite
View of tracks on component side

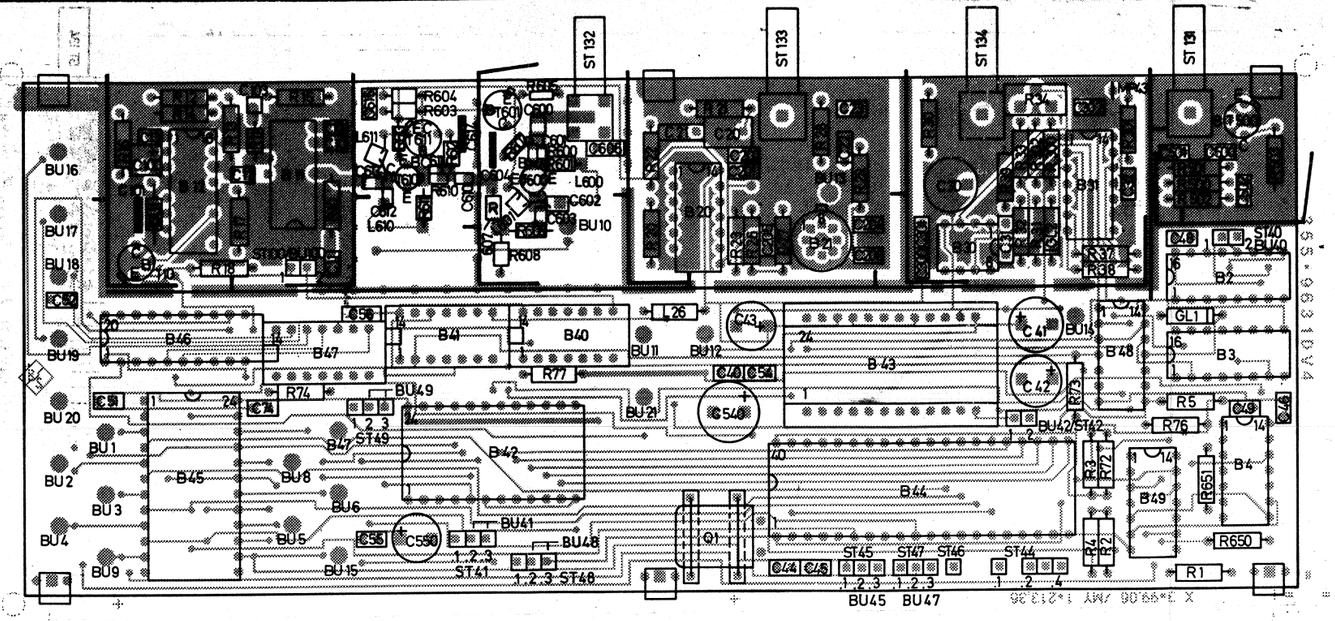

Ansicht und Leitungsführung Lötseite
View of tracks on solder side

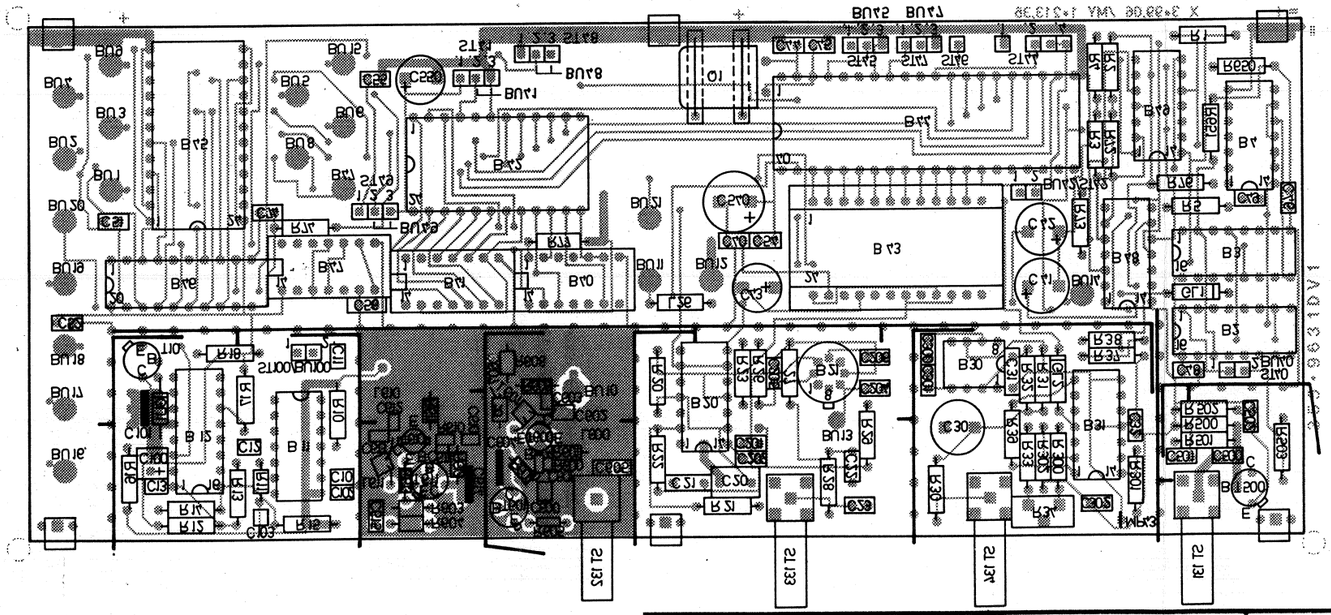

Für diese Zeichnung behalten wir uns alle Rechte vor.

Versorg.-Nr			VG-Sachnr
Maße ohne Toleranzangabe			Maßstab 1 : 1
			Halbzeug, Werkstoff
1GMC	Tag	Name	Benennung: Oszillatorsteuerung / Oscillator control — Z
Bearb	12.8.81	LS	
Gepr			
Norm			
ROHDE & SCHWARZ MÜNCHEN			Zeichn-Nr 355.9625 — Blatt-Nr 2
And Zust	Änderungs Mitteilung	Tag / Name	zu Gerät SMPC — neu 355.9519 V — erste 355.9619

095 2493.2 CDD

Ansichtrung Leiterführung Lötseite
View of tracks on solder side

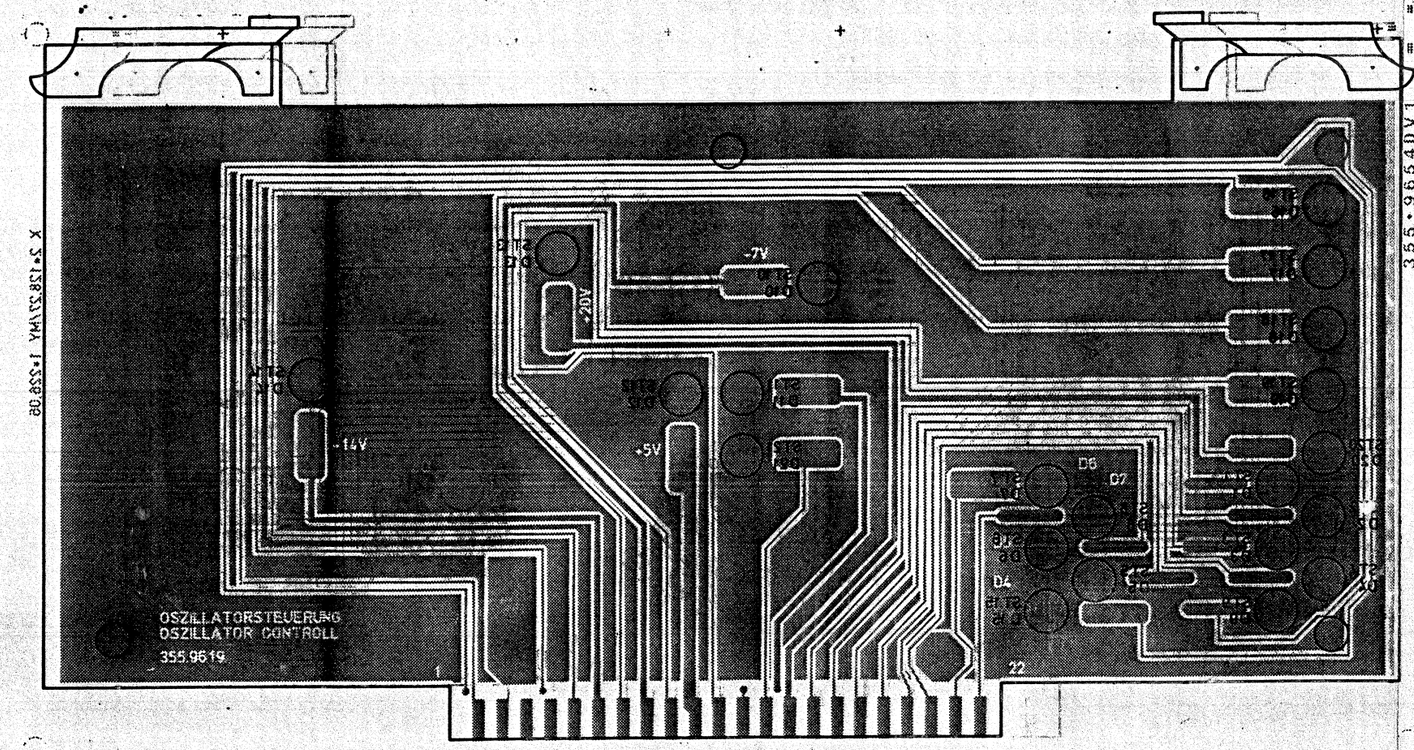

355.9654DV1

Versorg.-Nr					VG-Sachnr	
				Maße ohne Toleranzangabe	Maßstab 1 : 1	
					Halbzeug, Werkstoff	
				1GMC Tag Name	Benennung	
				Bearb 19.8.81 LS	Zuführung Osz.-Steuerung	Z
				Gepr	Feed Oscillator-control	
				Norm		
				ROHDE & SCHWARZ MÜNCHEN	Zeichn.-Nr 355.9648	Blatt-Nr 3
And Zust	Anderungs-Mitteilung	Tag	Name	zu Gerat SMPC	reg v 355.9519 V erste Z 355.9619	v Bl

Für diese Zeichnung behalten wir uns alle Rechte vor.

Ansicht und Leitungsführung Bauteilseite
View of tracks on component side

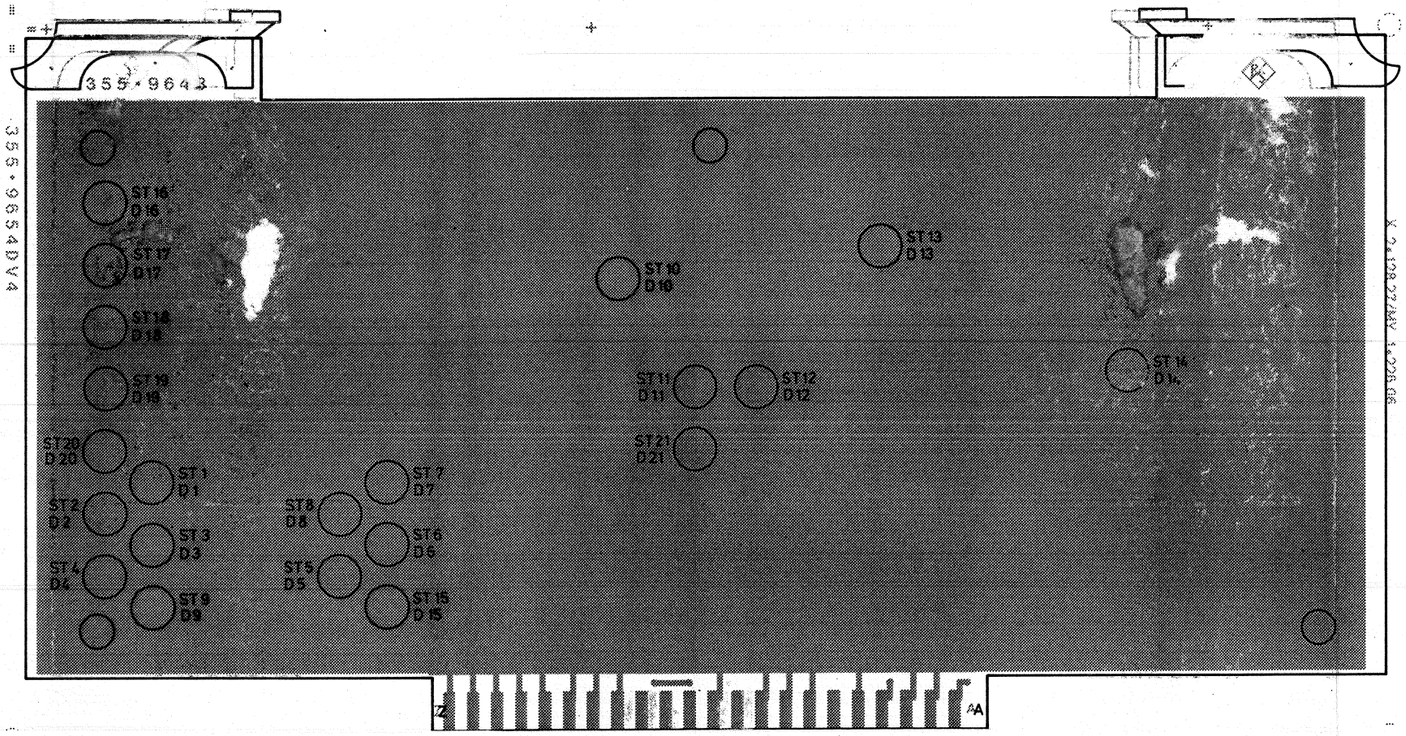

Für diese Zeichnung behalten wir uns alle Rechte vor.

Versorg.-Nr			VG-Sachnr
		Maße ohne Toleranzangabe	Maßstab 1 : 1
			Halbzeug, Werkstoff
		GMC / Bearb 19.8.81 / Gepr / Norm	Name LS
		ROHDE & SCHWARZ MÜNCHEN	Benennung: Zuführung Osz.-Steuerung / Feed Oscillator-control — Z
		zu Gerät SMPC	Zeichn.-Nr 355.9648 — Blatt-Nr 2
			reg V 355.9519 V — erste Z 355.9619
And Zust	Änderungs-Mitteilung	Tag	Name

095 2493-2 CDD